U.S. Department of Energy
National Transportation Program

Transporting Radioactive Materials

Answers to Your Questions

June 1999

Assistant Secretary for Environmental Management

Table of Contents

Overview 1

What is radiation? 2

Who sets the safety standards for exposure to radiation? 3

What kinds of radioactive materials are transported, and why? 4

What is radioactive waste? 6

Where is radioactive waste stored? 8

How are radioactive materials transported? 9

Does DOE transport radioactive materials by water? 10

How many radioactive materials shipments are made each year? 11

Who regulates the transport of radioactive materials? 12

Who is responsible for preparing and transporting radioactive materials? 13

How are radioactive materials packaged for shipment and how are people protected? 14

How are packages tested? 16

Are package test conditions realistic? 18

How are packages and vehicles carrying radioactive materials identified? 19

How are routes for radioactive materials shipments chosen? 20

What risks do routine shipments of radioactive materials impose along transport routes? 21

Are State and Tribal authorities notified of DOE radioactive materials shipments? 22

What responsibilities do State, Tribal, and local governments have in radioactive materials transport? 23

Who responds to an accident involving a shipment of radioactive materials? 24

How is liability coverage provided for transportation accidents? 26

Could someone sabotage radioactive materials shipments? 27

How many radioactive materials transportation accidents have occurred and what were the consequences? 28

How does DOE involve the public in its programs? 29

Where can I find additional information about transporting radioactive materials? 30

Glossary 32

Acronyms 35

Overview

Radioactive materials play an important role in our lives. They are used in the fields of medicine, industry, research, defense, and power production. To be used, most radioactive materials must first be transported — from their origin to processing and manufacturing facilities, to users and, eventually, to storage and ultimate disposal sites.

About 3 million packages of radioactive materials are shipped each year in the United States. Like other commodities, these shipments are carried daily by trucks, trains, ships, and airplanes.

The safe transport of radioactive materials is achieved by compliance with Federal regulations. Proper packaging is a cornerstone of shipment safety. Packaging designs for radioactive materials must protect the public and the environment even in case of an accident. Radioactive materials have been shipped in this country for more than 50 years. As with other commodities, vehicles carrying these materials have been involved in accidents. However, no deaths or serious injuries have resulted from exposure to the radioactive contents of these shipments.

People are concerned about how radioactive shipments might affect them and the environment. This booklet addresses some of the commonly asked questions about the transport of radioactive materials, in general and about U.S. Department of Energy (DOE) shipments, in particular. More detailed information is available from the sources listed at the end of this booklet.

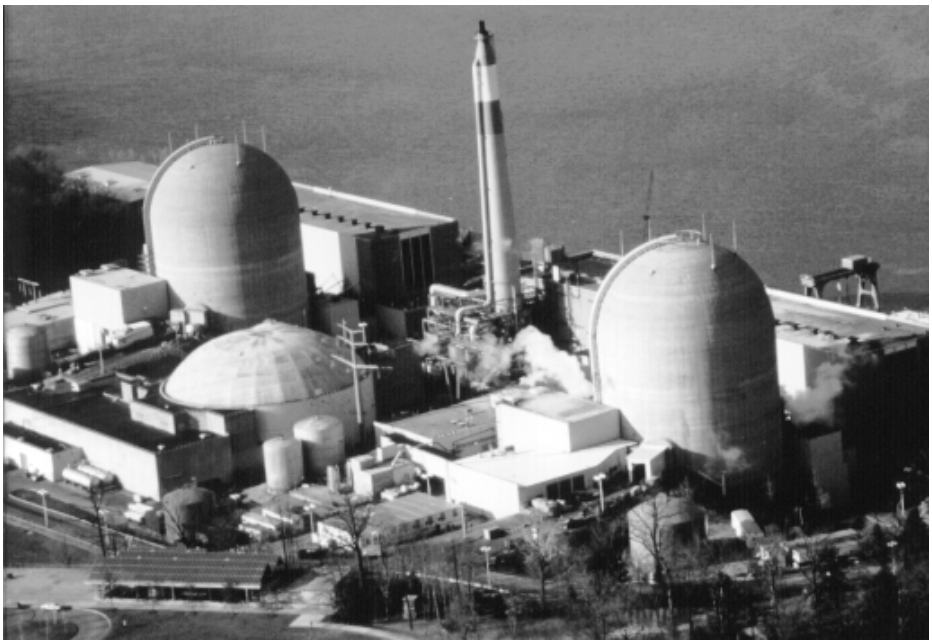

Radioactive materials are transported every day in support of many processes, such as medical diagnosis, research, and electricity production.

What is radiation?

Radiation is the energy released as unstable isotopes change to become more stable.

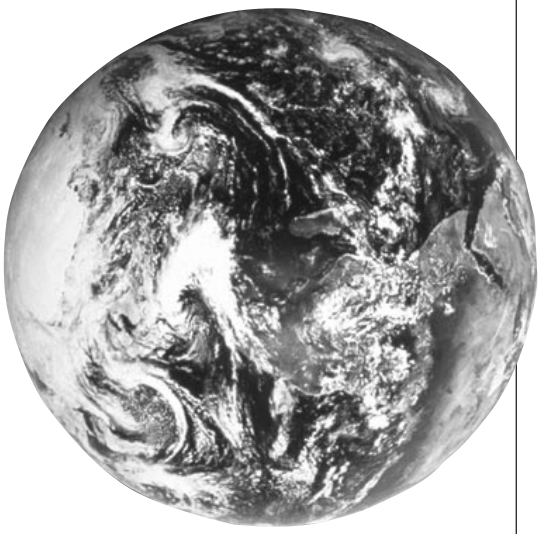

The Earth has been surrounded by radiation since its formation. This natural background radiation comes from many sources, including soil, water, and the Sun.

Medical x-rays are one example of manmade sources of radiation.

Only certain combinations of neutrons and protons result in stable atoms. Most of the 92 naturally occurring elements on Earth have isotopes that are unstable and can change into other forms. If there are too many or too few neutrons for a given number of protons, the resulting nucleus will have too much energy. This atom will not be stable. The unstable atom will try to become stable. It does this by giving off excess energy in the form of particles or rays (***radiation***). These unstable atoms are known as "radioactive atoms."

The number of electrons and protons determines the overall electrical charge of the atom. The term "ion" defines atoms or groups of atoms that have a positive or negative electrical charge. Ionization is the process of removing electrons from neutral atoms. ***Ionizing radiation*** is energy (particles or rays) emitted from radioactive atoms and some devices that cause ionization (e.g., x-ray machines, accelerators, or lasers). Nonionizing radiation does not have sufficient energy to ionize an atom (e.g., microwaves, radar, and light).

Radioactive material is any material that contains unstable (radioactive) atoms. The unstable atoms emit ***radiation***. ***Radioactivity*** is the process of unstable (or radioactive) atoms trying to become stable. This is done by emitting radiation in the form of alpha particles, beta particles, neutron particles, and gamma rays. Radiation dose rate is the amount of radiation received by an individual over a period of time. A person's exposure to radiation is measured in millirem. The average person receives about 360 millirem per year from natural (e.g., cosmic, radon, and bananas) and manmade (e.g., x-rays, nuclear medicine, and consumer products) sources of radiation.

Components of an Atom

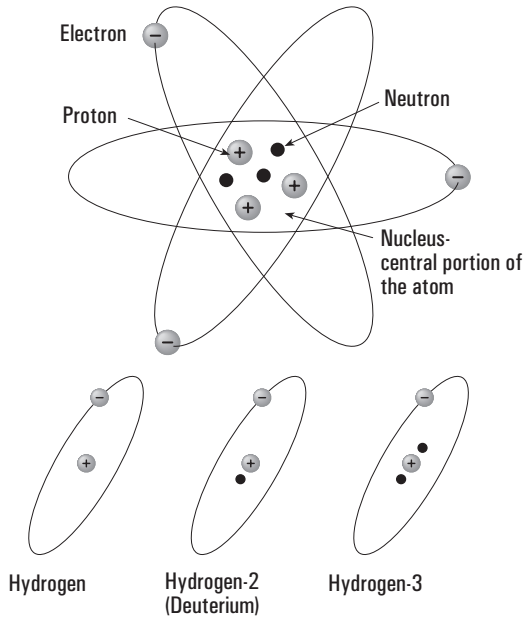

Isotopes: Atoms of the same element that have the same number of protons but different numbers of neutrons.

Who sets the safety standards for exposure to radiation?

The IAEA issues safety standards for radiation protection using recommendations provided by experts and independent reviews.

The International Atomic Energy Agency (IAEA) issues standards for radiation protection, based on more than 50 years of research and experience with the transportation of radioactive materials. The Agency also issues regulations that serve as a regulatory model for use in governing the safe packaging, handling, and transport of radioactive materials in international trade. Guidance for IAEA standards is based on *Basic Safety Standards for Radiation Protection Against Ionizing Radiation and for the Safety of Radiation Sources*, published by the IAEA, and recommendations made by the International Commission on Radiological Protection (an independent organization of physicians, radiologists, and scientists).

These standards have been extensively reviewed and agreed upon by international experts and organizations like the U.S. National Academy of Sciences and the United Nations Scientific Committee on the Effects of Atomic Radiation. The U.S. Department of Transportation (DOT), the U.S. Nuclear Regulatory Commission (NRC), and the U.S. Environmental Protection Agency (EPA) base domestic regulations on relevant portions of international safety standards.

International shippers use IAEA consensus standards to safely transport radioactive materials.

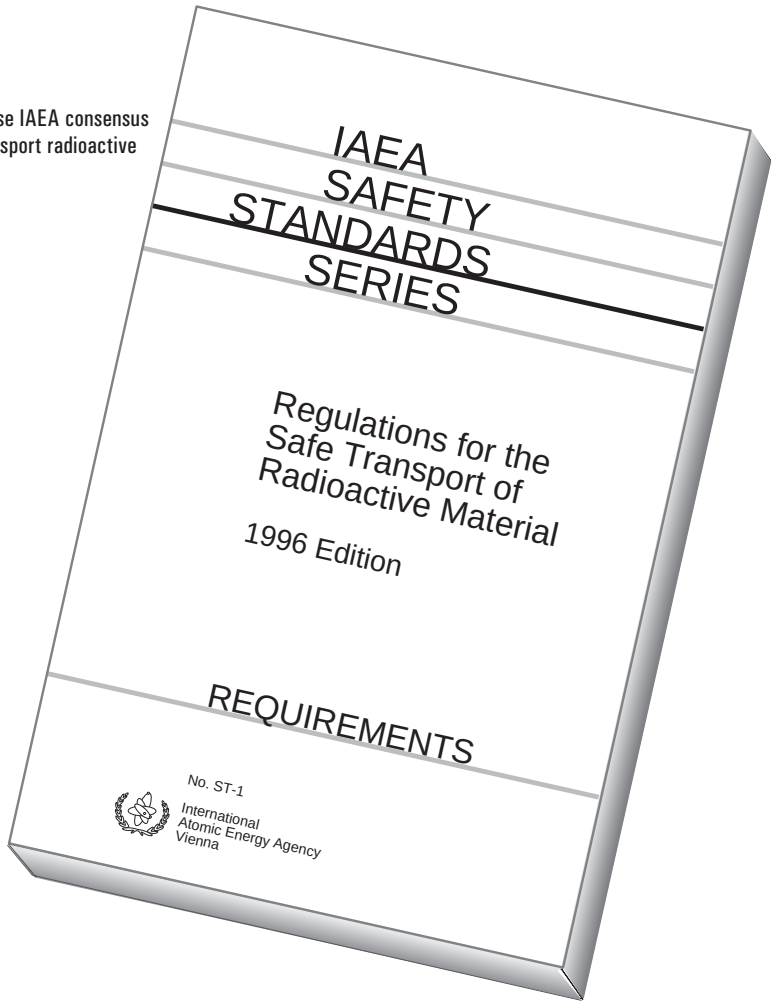

What kinds of radioactive materials are transported, and why?

Radioactive materials are used in a variety of applications including medicine, research, industry, and the generation of electricity.

Uranium ores, nuclear fuel assemblies, spent fuel, radioisotopes, and radioactive waste are some examples of radioactive materials shipped by DOE and industry.

Radioactive materials are produced by reactors as a byproduct of the fission process. This is one source of radioactive materials that can be processed, purified, and used in medical, industrial, research, and manufacturing facilities throughout the United States and around the world. Radioactive materials are used in the diagnosis and treatment of disease, agricultural research, manufacture of consumer goods, industrial radiography, and as a power source for space missions. Production, use, and storage/disposal often occur in separate locations, and the material must be transported between sites.

Industrial, research, and manufacturing facilities use radioactive materials for a variety of purposes, including leak detection in pipes and gas lines; laboratory experiments in physics, biology, and materials analysis; and consumer products, such as smoke detectors.

Certain DOE shipments, including weapons and weapons parts, are classified to protect the shipments and national security. They are transported by DOE's Transportation Safeguards Division in specially equipped trucks driven by armed couriers and accompanied by additional armed escorts. Special communications equipment is used to track these shipments.

Examples of radioactive material shipments:

- ***Uranium ores*** and associated chemical products are shipped from mines and mills to purification processors. Irradiated material is shipped to manufacturers of metal and ceramic fuel assemblies.

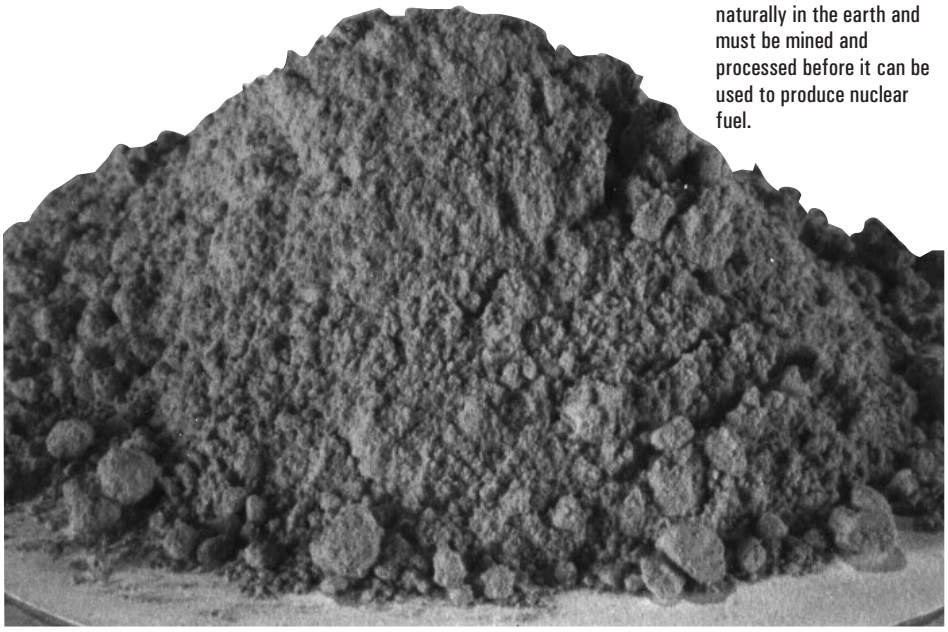

Uranium ore occurs naturally in the earth and must be mined and processed before it can be used to produce nuclear fuel.

- ***Nuclear fuel assemblies*** are the source of energy for commercial nuclear power plants and their production of electricity. Nuclear fuel is also produced for research reactors and national defense programs.

- ***Spent or "used" nuclear fuel*** will eventually be moved to a geologic repository for ultimate disposal. Commercial spent fuel is now being temporarily stored at power plants, while Government-owned spent fuel from test or research reactors is stored at DOE sites. DOE will consolidate its spent fuel at three sites, develop new dry storage facilities, and stabilize "at-risk" spent fuel so that it can be stored safely and will meet repository waste acceptance criteria.

- ***Radioisotopes for the medical community*** account for about 62 percent of radioactive materials shipments and are used in medical diagnosis, treatment, and research. About one-third of patients admitted to U.S. hospitals are diagnosed or treated using radioisotopes. Radioisotopes are used for developing new medicines, detecting broken bones, viewing internal organs, and treating some types of cancer. In addition, they are used to sterilize surgical instruments and gloves that would be damaged by conventional sterilization techniques using high-temperature steam.

- ***Radioisotopes for research and defense*** are produced by U.S. Government production reactors and transported to research laboratories and defense sites across the country.

- ***Radioactive waste*** results from processes that use radioactive materials. Storage and/or disposal of this radioactive waste often requires transport because facilities that produce waste cannot always store it.

A technician inspects new fuel rods which will be filled with uranium fuel to produce electricity.

Radioisotopes are produced and shipped for use in medicine, research, and defense programs.

Uranium mill tailings at Monticello, Utah, are excavated for disposal offsite.

What is radioactive waste?

Radioactive waste is the unusable byproduct from using, refining, and processing radioactive materials, and from decommissioning equipment and facilities that use those materials.

Spent fuel results from producing electricity at nuclear power plants or from operating other reactors such as research reactors. After the usable fuel has been expended, highly radioactive fuel assemblies remain. Spent fuel is shipped as a solid and is packaged in specially designed containers called "casks" for transport.

High-level waste results from the reprocessing of spent nuclear fuel. Reprocessing can recover the usable radioactive materials. High-level waste includes liquid waste produced directly during reprocessing and solid material derived from such liquid waste that contains fission products in sufficient concentrations. Other highly radioactive materials determined by the NRC to require permanent isolation are also considered high-level waste. The United States does not reprocess spent fuel from power plants, but has reprocessed spent fuel from many types of reactors in the past. Once a permanent repository is sited, high-level waste will be transported in casks similar to those used for spent fuel.

Transuranic waste contains manmade elements heavier than uranium, thus the name trans (or beyond) uranic. It results from defense production activities and includes contaminated protective clothing, tools, glassware, and equipment. Although most transuranic waste is no more radioactive than low-level waste, it is radioactive for a much longer period of time. There are two types of transuranic waste, "contact handled" which can be safely handled by workers without special protective clothing and "remote handled" which is handled and transported in specially shielded containers because of its higher level of radioactivity. Most of the waste scheduled for disposal at the Waste Isolation

Contact handled transuranic waste shipped to WIPP has specially designed packagings.

Pilot Plant (WIPP) in New Mexico is contact handled, packaged in 208-liter (55-gallon) drums, standard waste boxes, or overpacks and loaded into special transport containers.

Low-level waste is basically any radioactive waste that is not high-level waste, transuranic waste, spent fuel, or byproduct materials such as uranium mill tailings. It results from research, medical, and industrial processes that use radioactive materials. Commercial power plant operations and defense-related activities, including weapons disassembly and cleanup of production sites, also produce some low-level waste. It usually contains small amounts of short-lived radioactive material dispersed in large quantities of material and poses little transportation risk. Typical low-level waste consists of used protective clothing, rags, tools and equipment, used resins and residues, dirt, concrete, construction debris, and scrap metal. Low-level waste is usually packaged in sturdy wooden or steel crates and steel drums for shipment to storage or disposal sites.

Mixed waste is waste that contains both hazardous chemical components and radioactive components and is subject to the requirements of the Atomic Energy Act and the Resource Conservation and Recovery Act. Much of DOE's mixed waste is mixed low-level waste in soils.

Uranium mill tailings are radioactive rock and soil byproducts resulting from uranium mining and milling. Mill tailings contain small amounts of naturally occurring radium that decays and emits a radioactive gas, radon. When radon gas is released into the atmosphere, it disperses harmlessly. However, radon gas might be harmful if a person breathes it in high concentrations over a long period of time.

Mixed waste sludge, such as this sample, must be treated prior to shipment.

Low-level waste, which includes rags, papers, filters, and protective clothing, is packaged in steel drums or sturdy wooden or steel crates.

Where is radioactive waste stored?

Radioactive wastes will be shipped to interim storage or permanent disposal sites. Each type of waste is analyzed and sent to an appropriate disposal site.

Low-level waste is transported to disposal sites licensed by the NRC.

High-level waste resulting from defense programs is stored temporarily in underground tanks and vaults at Government sites. This waste will be solidified in a glass form, packaged in stainless steel canisters, and placed in heavily shielded casks for transport to a permanent geologic repository, when one becomes available.

Spent fuel is currently stored in pools of water, aboveground vaults, or concrete or steel casks onsite at the reactor or commercial power plant. Spent fuel from DOE-owned reactors is stored where it is produced or at other DOE sites. The spent fuel for which DOE is responsible falls into two categories. DOE-owned spent nuclear fuel from DOE defense and research production reactors, non-DOE Government reactors, and university research reactors is managed by the Office of Environmental Management, along with spent fuel from some privately owned reactors and foreign research reactors. The Office of Civilian Radioactive Waste Management is responsible for managing and disposing of commercial power reactor fuel. Like high-level waste, spent fuel will be shipped to a permanent geologic repository.

Transuranic waste from defense production activities is stored at Government sites throughout the country. Some of this waste will be shipped to WIPP, located in southeastern New Mexico, for disposal in deep, geologically stable salt beds.

Low-level waste is sent to disposal sites licensed by the NRC. Several commercial sites accept waste from commercial and Federal producers of low-level waste, and some States have formed regional compacts to dispose of low-level waste when these facilities close. DOE low-level waste is disposed of at commercial sites and at DOE facilities designed and licensed for disposal.

Mixed waste is treated, packaged, and shipped offsite to DOE or commercial disposal sites.

Uranium mill tailings are transported to several disposal facilities specifically designed to accept them. When a disposal site reaches capacity, it is sealed to prevent dispersion of radon gas.

DOE ships transuranic waste to WIPP.

How are radioactive materials transported?

The shipper selects a specific mode of transport based on many factors, including size and weight of the packages, the characteristics and composition of the radioactive contents, the distance to be shipped, and the availability of transportation facilities and infrastructure (such as railroad tracks).

Radioactive materials used in medical treatments are frequently short-lived, and the packages are small and weigh very little. They must be delivered quickly to hospitals and medical laboratories, so air shipment is generally the best method. Spent fuel from nuclear power plants and research reactors is shipped in large, heavily shielded packagings, which are more easily moved by trucks, railcars, or ships.

Because of strict regulations on what radioactive materials can be shipped by air and because water transport is slow and geographically limited, trucks and trains are used for most large and heavy radioactive material shipments in the United States.

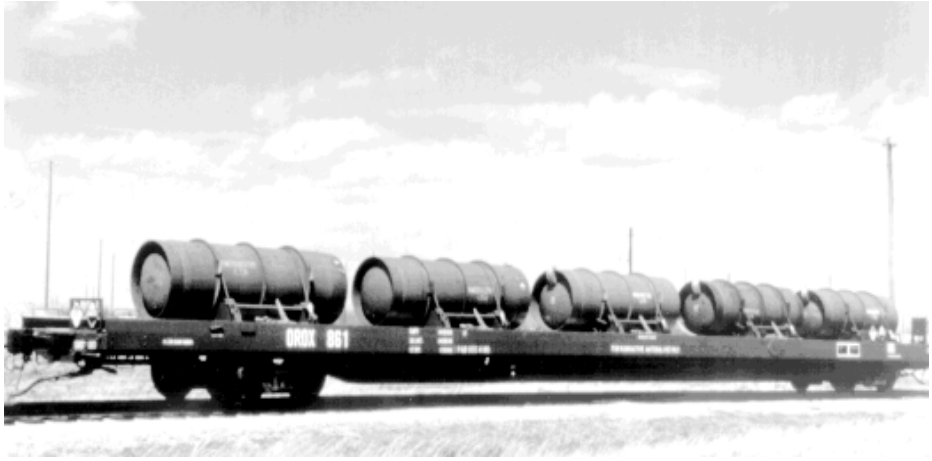

Large volumes of material, such as uranium hexafluoride, are often transported by rail.

Trucks are used to transport a variety of radioactive materials.

Radioactive materials are transported by air, highway, rail, and water. Both Government and commercial vehicles are used. Because of performance-oriented and certified packaging, radioactive materials may be transported in general commerce with other commodities.

Large international shipments, such as spent nuclear fuel, are transported by ship.

Radioactive materials used for medical treatments are short-lived and are generally transported by air.

Does DOE transport radioactive materials by water?

Water transport is used for only a small percentage of DOE radioactive materials shipments. Materials transported by water include spent (used) nuclear fuel, uranium metal, uranium hexafluoride, and low-level waste.

Water transport is generally very slow and geographically limited when compared to highway, rail, and air transportation. Transport by water accounts for a very small percentage of DOE radioactive materials shipments, less than 1 percent by weight. Materials transported by water include spent (used) nuclear fuel, uranium metal, uranium hexafluoride, and low-level waste.

Ships are typically used when the cargo originates in or is destined for locations outside the continental United States. Barge transportation is sometimes suitable for shipments on U.S. waterways.

Regulatory Authority: International transport of radioactive materials is governed by the IAEA and the International Maritime Organization. Transportation in U.S. waters and ports is regulated by the DOT and the NRC, whose requirements are equal to and compatible with IAEA standards. DOT inspection and enforcement activities are carried out by the U.S. Coast Guard.

Routing: Currents, weather conditions, and geological features limit the number of oceanic routes, which are determined by the shipper or carrier in concert with the Coast Guard and, in some cases, the NRC. Barge routes share similar limitations.

Emergency Response: In situations which might lead to a potential radioactive release in U.S. coastal waters, the person in charge of the vessel would notify the DOT National Response Center at Coast Guard Headquarters in Washington, DC. The Center would take action under the *National Contingency Plan*. The Coast Guard and the U.S. Navy would provide response support.

Spent nuclear fuel and high-level radioactive waste are transported internationally by ship.

How many radioactive materials shipments are made each year?

The use of radioactive materials is so common in the United States that these materials are transported throughout the Nation every day. The number of radioactive material shipments is small compared with the 300 million total shipments of hazardous materials made yearly. Of the estimated 3 million radioactive material shipments, most involve low-level materials. DOE shipments account for less than 1 percent of all radioactive material shipments in the United States; however, DOE shipments account for about 75 percent of the total curies shipped.

About 3 million radioactive materials shipments are made each year in the United States.

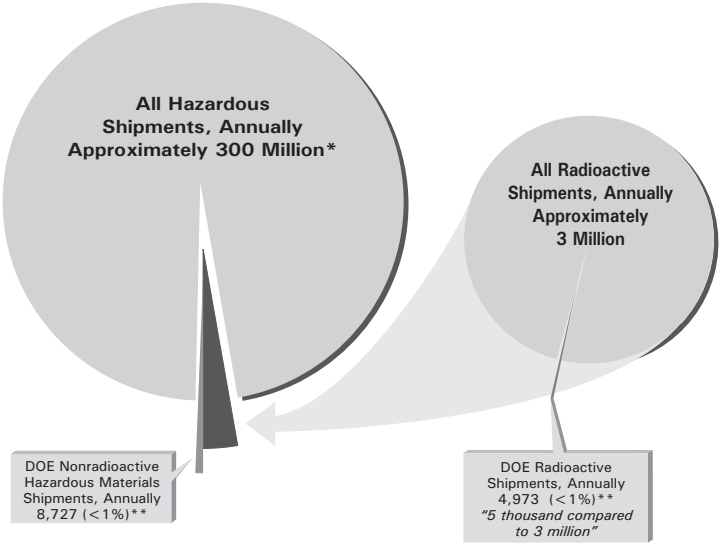

Total Annual Hazardous and Radioactive Shipments in the United States and by DOE

* *Based on DOT Office of Hazardous Materials Safety estimate.*

** *Source: DOE transportation activities information for Fiscal Year 1998*

Number of DOE Radioactive Materials Shipments by Mode of Transportation for Fiscal Year 1998

Source: DOE transportation activities information for Fiscal Year 1998.

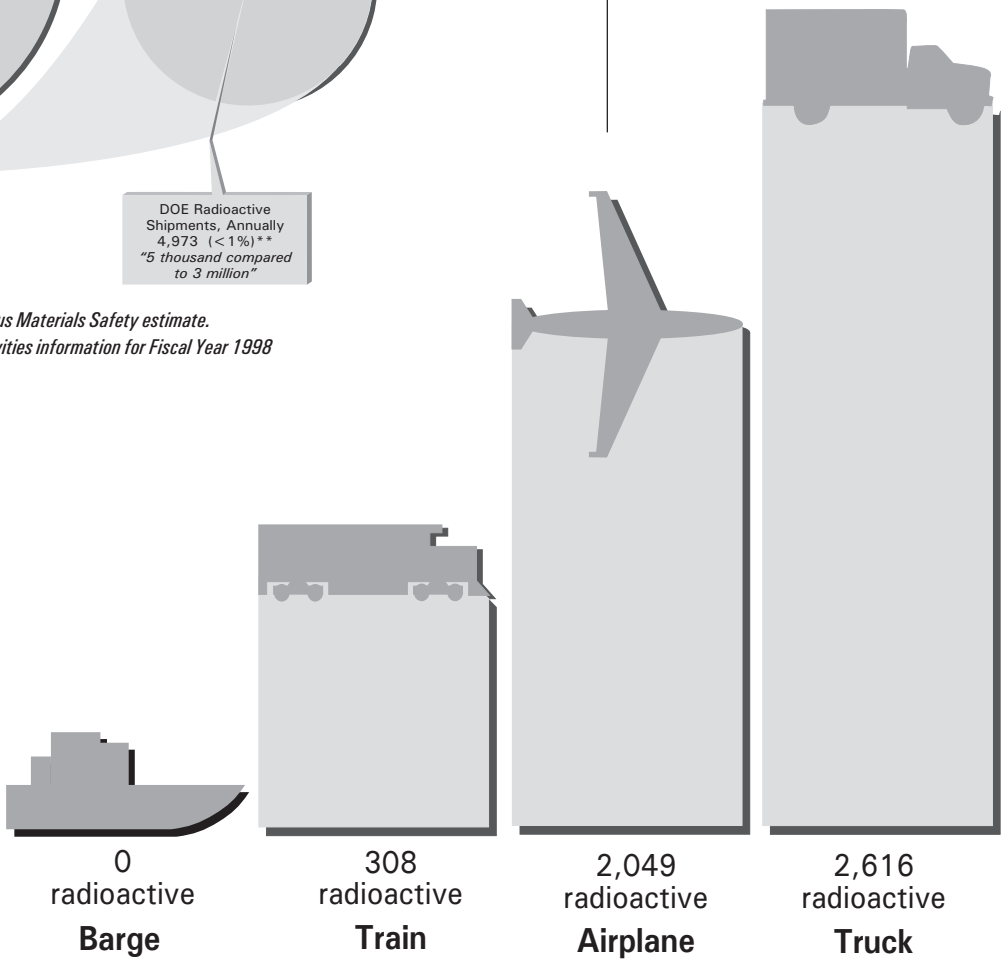

Who regulates the transport of radioactive materials?

DOT and the NRC have regulatory responsibilities to reduce the risks associated with radioactive materials transport. The regulations of these agencies are based on recommendations made by the IAEA.

U.S. regulations are based on international transport standards that are used to safely ship radioactive materials worldwide. DOT and NRC share primary responsibility for establishing and enforcing requirements for the safe transport of radioactive materials in the United States. **DOT** regulations set the standards for packaging, transporting, and handling radioactive materials, including labeling, shipping papers, placarding, loading, and unloading requirements. DOT regulations also specify training needed for personnel who perform handling and transport of hazardous materials.

NRC regulates the packaging and transport operations of its licensees, including commercial shippers of radioactive materials. It sets design and performance standards for packagings that carry materials with higher levels of radioactivity. NRC also establishes safeguard and security regulations to minimize the possibility of theft, diversion, or attack on certain shipments.

Other agencies regulating handling and transport of radioactive materials include the U.S. Postal Service, the Occupational Safety and Health Administration, and the EPA.

Although DOE is a shipper of radioactive materials and not a regulator, it administers its shipments according to a series of Departmental Orders (written requirements) and other internal guidance. DOE uses Federally approved packaging and complies with applicable Federal regulations for packaging and shipping. The Department follows all NRC standards in developing its own packagings.

The **IAEA** governs international shipments of radioactive materials. Organizations regulating specific transport modes include the **International Maritime Organization** for water shipments and the **International Civil Aviation Organization** for air transport.

DOT and NRC share primary responsibility for regulating the safe transport of radioactive materials in the United States. Detailed information on DOT requirements is found in the Code of Federal Regulations, Title 49. NRC requirements are detailed in Title 10.

Who is responsible for preparing and transporting radioactive materials?

The shipper prepares radioactive materials for transport at their point of origin, classifies and packages them, marks and labels the packages, and completes the shipping papers before turning the radioactive materials over to a carrier for shipment. The shipper also signs the shipping papers, certifying that all information is correct and, when required, ensures the proper use of placards by the carrier.

The carrier who transports the materials is responsible for examining the shipper's certification papers, checking packages for proper labeling and marking, placarding the vehicle, stowing and securing the packages, complying with driver training and routing requirements, and following vehicle safety requirements. If an accident occurs, the carrier must report the incident to the DOT or other appropriate organizations, such as the National Response Center. DOE, through its National Transportation Program, makes every effort to ensure the quality of carriers, drivers, and equipment for its shipments.

In general, shippers and carriers are responsible for the proper preparation and transport of radioactive materials.

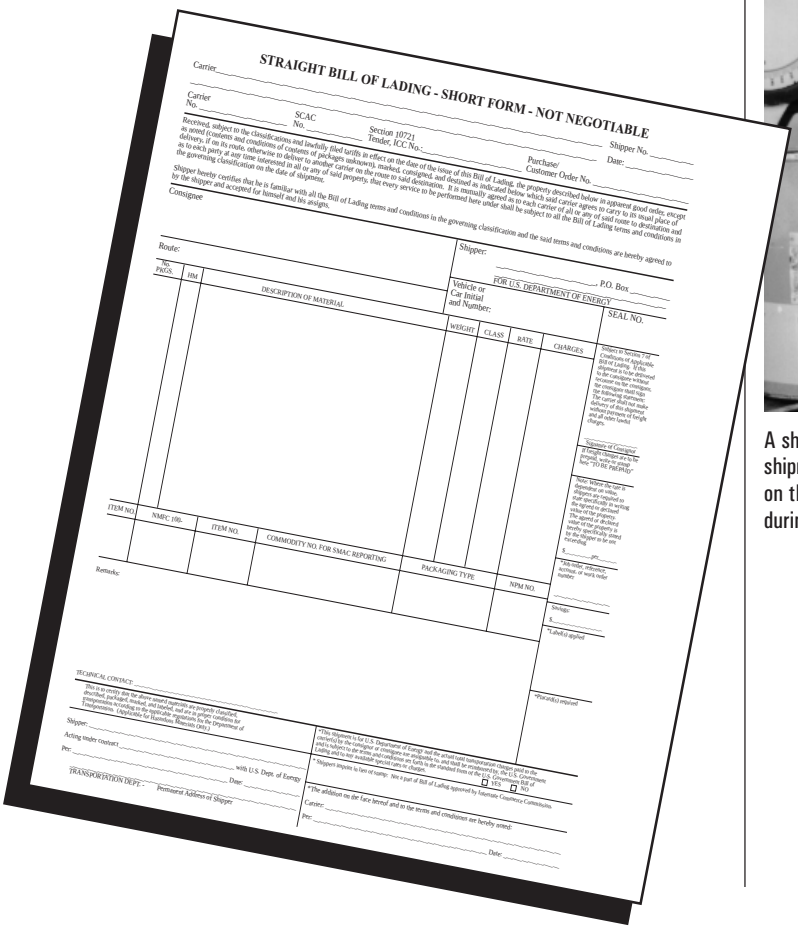
STRAIGHT BILL OF LADING - SHORT FORM - NOT NEGOTIABLE

Carrier

Carrier No.

SCAC No.

Section 10721 Tender, ICC No.:

Shipper No.

Date:

Purchase/ Customer Order No.

Received, subject to the classifications and lawfully filed tariffs in effect on the date of the issue of this Bill of Lading, the property described below in apparent good order, except as noted (contents and conditions of contents of packages unknown), marked, consigned and destined as indicated below, which said carrier agrees to carry to its usual place of delivery, if on its route, otherwise to deliver to another carrier on the route to said destination. It is mutually agreed as to each carrier of all or any of said route to destination and as to each party at any time interested in all or any of said property, that every service to be performed here under shall be subject to all the Bill of Lading terms and conditions in the governing classification on the date of shipment.

Shipper hereby Certifies that he is familiar with all the Bill of Lading terms and conditions in the governing classification and the said terms and conditions are hereby agreed to for the shipper and accepted for himself and his assigns.

Consignee

Route:

Shipper:

P.O. Box

FOR U.S. DEPARTMENT OF ENERGY

Vehicle or Car Initial and Number:

SEAL NO.

NO. PKGS.	HM	DESCRIPTION OF MATERIAL	WEIGHT	CLASS	RATE	CHARGES

Shipper to verify the Completion of applicable Bill of Lading. If the shipment is to be delivered to the consignee without recourse on the consignor, the consignee must sign the following statement: The carrier shall not make delivery of this shipment without payment of freight and all other lawful charges.

Signature of Consignee

If freight charges are to be prepaid, write or stamp here: "TO BE PREPAID"

Note: Where the rate is dependent on value, shippers are required to state specifically in writing the agreed or declared value of the property. The agreed or declared value of the property is hereby specifically stated by the shipper to be not exceeding

$ _____ per _____

ITEM NO.	NMFC ITM.	ITEM NO.	COMMODITY NO. FOR SMAC REPORTING	PACKAGING TYPE	NPM NO.

Remarks:

*Bill lading, reference number or work order number

Freight

$

*Check(s) applied

*Prepaid(s) required

TECHNICAL CONTACT:

This is to certify that the above-named materials are properly classified, described, packaged, marked, and labeled, and are in proper condition for transportation according to the applicable regulations of the Department of Transportation. Liquifiable for Hazardous Materials (49CF)

Shipper:

Acting under contract

Per:

with U.S. Dept. of Energy

Date:

TRANSPORTATION DEPT.: Permanent Address of Shipper

*The shipment to the U.S. Department of Energy and the actual cash transportation charges paid to the carrier(s) by the shipper or consignee are assignable to and shall be reimbursed by the U.S. Government and/or subject to the shipper and conditions for assignment, as stated in the U.S. Government bill of Lading and to not available special rates or terms, as stated from or the U.S. Government.

*Shipper's inquire to fare of same: See 1 part of Bill of Lading approved by Interstate Commerce Commission. ☐ YES ☐ NO

*The addition on the face hereof and to the terms and conditions set hereby noted:

Carrier:

Per:

Date:

A shipper fills out paperwork on a radioactive shipment. This paperwork offers detailed information on the materials and will accompany the shipment during transport.

How are radioactive materials packaged for shipment and how are people protected?

Radioactive materials are specially packaged in accordance with DOT and NRC regulations. The form, quantity, and concentration of the radioactive materials determine the type of packaging used.

Low-specific activity (LSA) waste such as solidified sludge and compacted lab waste is sometimes packaged in 208-liter (55-gallon) drums for transport.

All radioactive materials must be properly packaged so that the radiation level at the package surface does not exceed DOT regulations. This protects package handlers, transporters, and the public against receiving dose rates in excess of recognized safe limits.

After radioactive materials are placed in the proper packaging, they are sealed, surveyed with special instruments to determine that radiation is within regulatory limits, and checked for external contamination. The package is then marked and labeled to provide information about its contents.

Four basic types of packaging are used: Excepted, Industrial, Type A, and Type B. Another option, the Strong-tight packaging, is still available for some domestic shipments of radioactive materials.

Excepted packagings are used to transport materials with extremely low levels of radioactivity and must meet only general design requirements. Excepted packagings range from a product's fiberboard box to a sturdy wooden or steel crate, and typical shipments include limited quantities of materials, instruments, and articles such as smoke detectors.

Industrial packagings (IP) are used to transport materials which present a limited hazard to the public and environment, such as contaminated equipment and radioactive waste solidified in materials such as concrete. They are grouped into three categories based on the strength of the packaging. **IP-1** packagings must meet the general design requirements of an excepted packaging. **IP-2** packagings must pass the free-drop and stacking tests. **IP-3** packagings must also pass the water spray and penetration tests for Type A packagings used for solid contents. See illustrations on page 16.

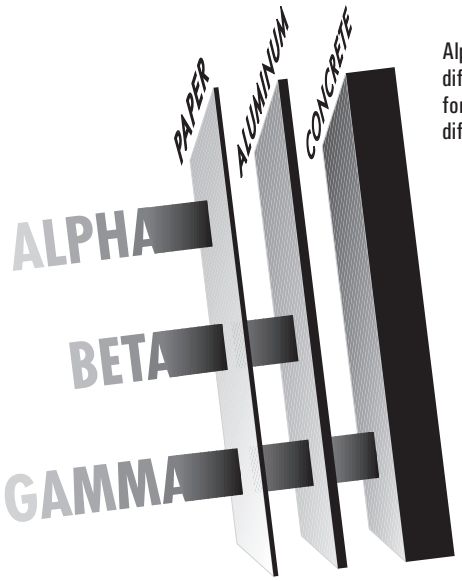

Alpha, beta, and gamma radiation have different penetrating powers. All three forms can be damaging and require different shielding materials.

Type A packagings are used to transport radioactive materials with higher concentrations of radioactivity such as radiopharmaceuticals and low-level radioactive wastes. Typically, Type A packagings have an inner containment vessel made of glass, plastic, or metal and packing material made of polyethylene, rubber, or vermiculite.

Type B packagings are used to transport materials with radioactivity levels higher than those allowed in Type A packaging. Type B packagings range from small drums, 208 liters (55 gallons), to heavily shielded steel casks that sometimes weigh more than 100 metric tons (98 tons). Examples of materials transported in Type B packagings include spent fuel, high-level radioactive waste, and high concentrations of radioisotopes such as cesium-137 and cobalt sources.

Strong-tight packagings are not required to meet the general design requirements for radioactive materials packagings. They are only authorized for domestic shipment of certain materials with low levels of radioactivity in a vehicle hired exclusively for their transport. This exception is allowed because of the low hazard and historical safety record for the transport of these materials. Examples of materials transported in Strong-tight packagings are depleted or natural uranium and rubble from the decommissioning of nuclear reactors.

Type A packages are used to transport small quantities of radioactive materials, such as radiopharmaceuticals used for medical procedures.

Materials with higher levels of radioactivity are transported in Type B packages.

Excepted packages are used to transport materials that present low hazards because of their low concentration of radioactive material. Examples are consumer goods, such as smoke detectors.

How are packages tested?

Type A and B packaging designs must be capable of withstanding a specified series of transport conditions simulated by performance testing and/or engineering analyses.

Excepted packagings must meet only general design requirements because of the very limited hazard posed by their contents.

Industrial packagings are designed to provide varying degrees of protection based on their contents. Like excepted packagings, they must contain their radioactive contents under normal transport conditions including vibration. IP-2 packagings are designed to offer a slightly higher level of protection and must pass free-drop and compression tests in addition to the IP-1 standards. Testing requirements for IP-3 packagings are the same as for Type A packagings used to ship solids.

Type A packagings are designed to protect and retain their contents under normal transport conditions and must maintain sufficient shielding to limit radiation exposure to handling personnel.

Type A Tests

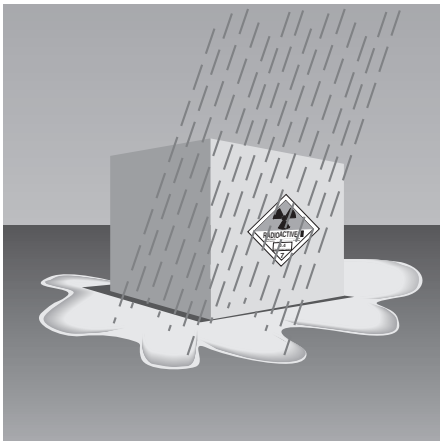

Water spray for 1 hour [to simulate rainfall of 5 centimeters (2 inches) per hour].

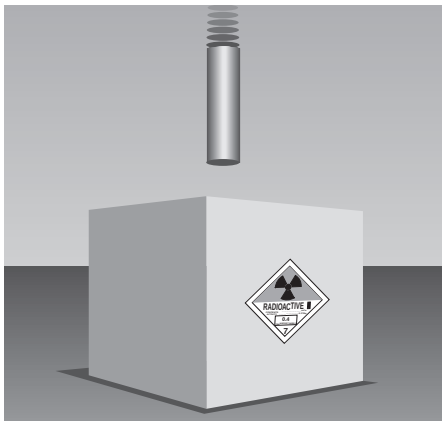

Penetration test by dropping a 6-kilogram (13.2-pound) bar [3.2-centimeter (1.25-inch) diameter] vertically onto the package from a height of 1 meter (40 inches).

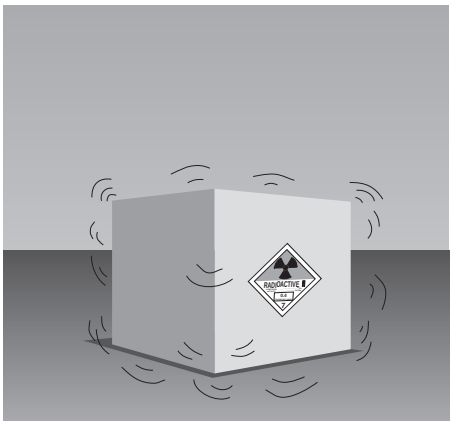

Vibration test for 1 hour on a platform vibrating so that the package will be raised high enough for a rigid material [1.6 millimeter (0.063 inch) thick] to be passed between the bottom of a package and the platform.

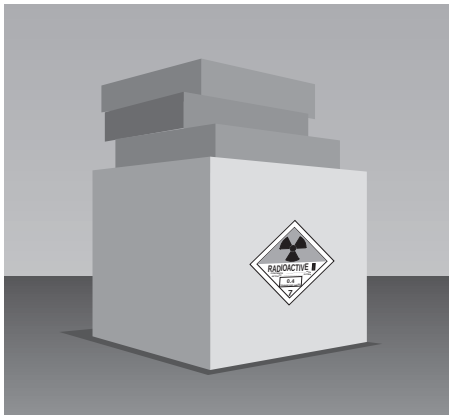

Compression test of at least 5 times the weight of the package for at least 24 hours.

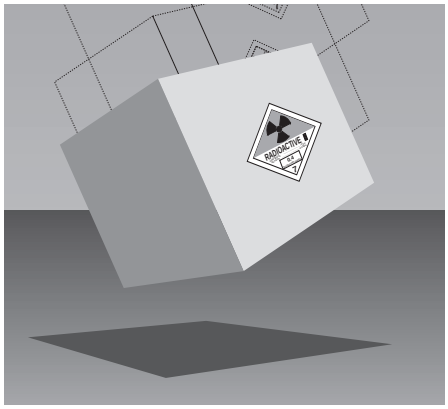

Free-drop test onto a flat, hard surface [a 1.2-meter (4-foot) drop if the package weighs 4,989.5 kilograms (11,000 pounds) or less].

Type B packagings are designed to protect and retain their contents in both routine transport operations and under severe accident conditions. Type B packaging designs are certified by the NRC before use. Every 5 years, the packaging design is reviewed by the NRC to determine if its certificate will be renewed. DOE is allowed to certify some of its own packagings that have been shown to meet Federal requirements.

The ability of a packaging design to withstand test conditions may be demonstrated by comparing designs to similar packagings, engineering analyses (such as computer-simulated tests), or by scale-model or full-scale testing. In most cases, a combination of methods is used. DOT and NRC require complete documentation that each packaging design can withstand the test conditions before the package is used for actual transport. In addition, quality assurance documentation must be completed for each packaging built according to an approved packaging design. Individual packagings are not tested before each use.

The conditions become more rigorous as the radiation level of the intended contents increases.

Sequence for Physical Testing of Type B Packaging Designs
(as listed in 10 CFR 71.73)

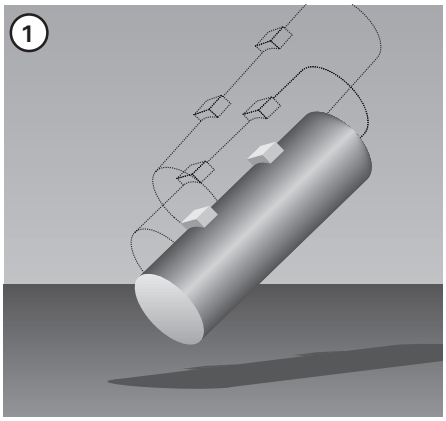

Free Drop (Impact): A 9-meter (30-foot) drop onto a flat, unyielding* surface so that the package's weakest point is struck.

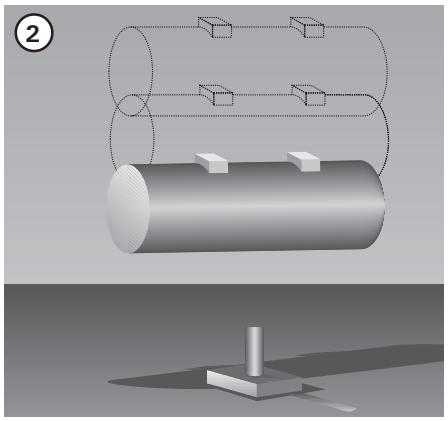

Puncture: A 1-meter (40-inch) free drop onto a 15-centimeter (6-inch) diameter steel rod at least 20 centimeters (8 inches) long, striking the package at its most vulnerable spot.

Crush: For some low-density, light-weight packages, a dynamic crush test is required, consisting of dropping a 500-kilogram (1,100-pound) mass from 9 meters (30 feet) onto the package resting on an unyielding surface.

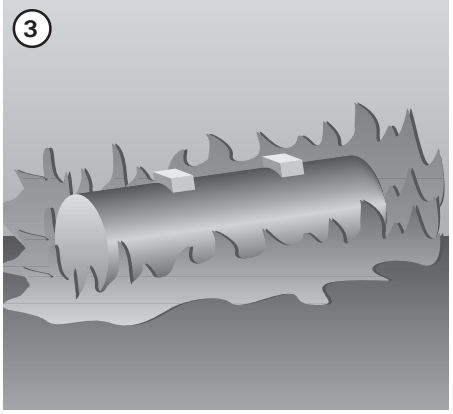

Heat: Exposure of the entire package to 800°C (1,475°F) for 30 minutes.

* Using an unyielding surface ensures that damaging energy created by the impact will be absorbed by the package rather than the surface.

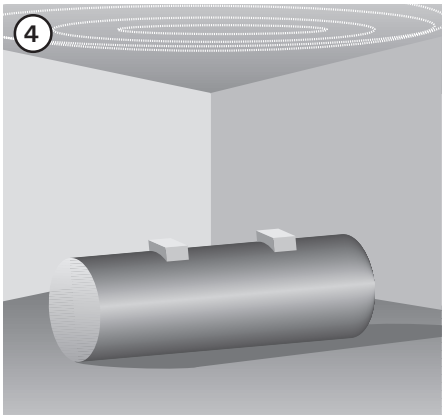

Immersion (fissile materials): Package immersed under 0.9 meters (3 feet) of water in a position where maximum leakage is expected.

Immersion (all packages): A separate, undamaged package is submerged under 15 meters (50 feet) of water.

Are package test conditions realistic?

Full-scale tests, analytical reviews, and experience with actual transportation accidents confirm that tests for radioactive material packages are realistic.

Full-scale demonstrations have been conducted in the United States to verify that computer codes and scale-model testing accurately predict damage to Type B packages. Similar tests have been conducted in the United Kingdom, Germany, France, and Japan. In each of these tests, the cask prototype was deformed as predicted by analysis, but no simulated radioactive material was released. These tests verified computer-model projections.

Real-life accidents involving radioactive material shipments have occurred. To date, no serious injuries or fatalities have been caused by the radioactive cargo. Data from actual accidents, as well as analytical projections, show that accidents most often produce impact and fire conditions far less severe than the Type B hypothetical accident conditions of the regulations.

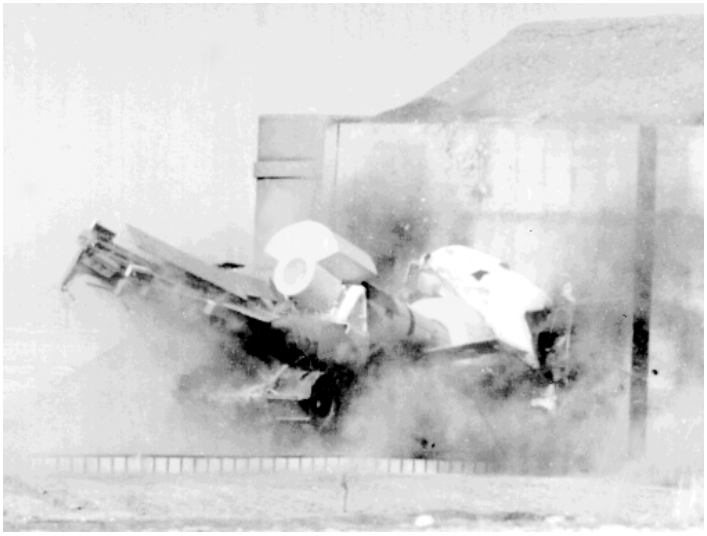

Full-scale tests conducted in 1977 included crashing tractor-trailers carrying cask prototypes into concrete walls at about 98 and 135 kilometers (61 and 84 miles) per hour. At about 135 kilometers (84 miles) per hour, the cask was slightly dented, but it did not release its simulated radioactive material.

How are packages and vehicles carrying radioactive materials identified?

Markings on the package list the proper shipping name, an emergency response identification number, the shipper's name and address, and other information.

Labels are placed on opposite sides of a package to identify the contents and radioactivity level. The appropriate label is determined by the type of material shipped and the measured radiation levels of the package's contents. Labels also provide a hazard index to promote proper handling. Shippers of radioactive materials use one of three labels: Radioactive White I, Yellow II, or Yellow III. Shipments with extremely low levels of radioactivity that would present no severe hazard if involved in a transport accident are excluded from labeling requirements.

Vehicles transporting certain shipments of radioactive materials must have a placard on the front, rear, and both sides. Shipments carrying large amounts of high-level radioactive material (e.g., spent fuel) may be identified as a Highway Route Controlled Quantity (HRCQ), which must have the required radioactive warning placard placed on a square, white background.

Shipping papers carried in the cab of the vehicle provide more details about the contents' characteristics than the label. Shipping papers include a signed certification showing the material is properly classified, described, packaged, marked, labeled, and in proper condition for transport. The shipping papers also contain emergency information, such as contacts and telephone numbers, in case an accident occurs during shipment.

Some radioactive materials shipments are identified by diamond-shaped placards located on all four sides of the vehicle.

Radioactive material shipments are identified by distinctive markings and labels on packages.

Packages of radioactive materials are labeled with a Radioactive I, II, or III label, depending on the activity level of the material.

How are routes for radioactive materials shipments chosen?

Routes for vehicles carrying certain radioactive materials are chosen according to DOT regulations to minimize the risk of exposure to radiation.

Spent fuel and other materials with a high level of radioactivity must be transported as HRCQ shipments. DOT regulations require carriers of HRCQ shipments to use "preferred routing," which takes into consideration such factors as:

- accident rate,
- transit time,
- population density,
- activities,
- time of day, and
- day of week.

A preferred route is an Interstate System highway or alternative route selected by State routing or Tribal authorities in accordance with DOT guidelines. The routing authority must consult with affected local jurisdictions and neighboring States to consider all safety factors and to connect their routes with DOT-preferred routes at State borders.

The offeror or carrier, as appropriate, of HRCQ shipments must select the preferred route to be used and prepare a written plan for NRC showing origin and destination of the shipment, scheduled route, all planned stops, estimated time of departure and arrival, and emergency telephone numbers. NRC checks routes for security purposes.

Rail routes for shipping radioactive materials are determined by the shipper and the railroad companies that operate between the origin and destination based on safety, best available trackage, schedule efficiency, and cost effectiveness.

Currents, weather conditions, and geological features that could impact safe passage limit the number of oceanic routes. Barge routes share similar limitations. The U.S. Coast Guard participates in establishing routes.

Federal regulations require that certain radioactive materials shipments travel on designated routes.

What risks do routine shipments of radioactive materials impose along transport routes?

According to the National Council on Radiation Protection and Measurements, the average person receives around 3.6 millisievert (360 millirem) annually from natural and manmade sources of radiation.

One of the tools used by DOE to evaluate risks associated with its radioactive materials transportation programs is a computer model called RADTRAN. By specifying radioactive material type, packaging, transportation, weather conditions, and other factors, radiological exposure can be estimated for urban, suburban, and rural population levels.

Environmental Impact Statements prepared by DOE consistently agree that incident-free (routine) shipments of radioactive materials, even spent nuclear fuel and high-level radioactive waste, will have little impact on the people and environment along transport routes. For example, a person standing 1.8 meters (6 feet) from a vehicle carrying a fully loaded spent nuclear fuel transportation cask for about an hour, would most likely receive a dose equivalent to a single chest x-ray.

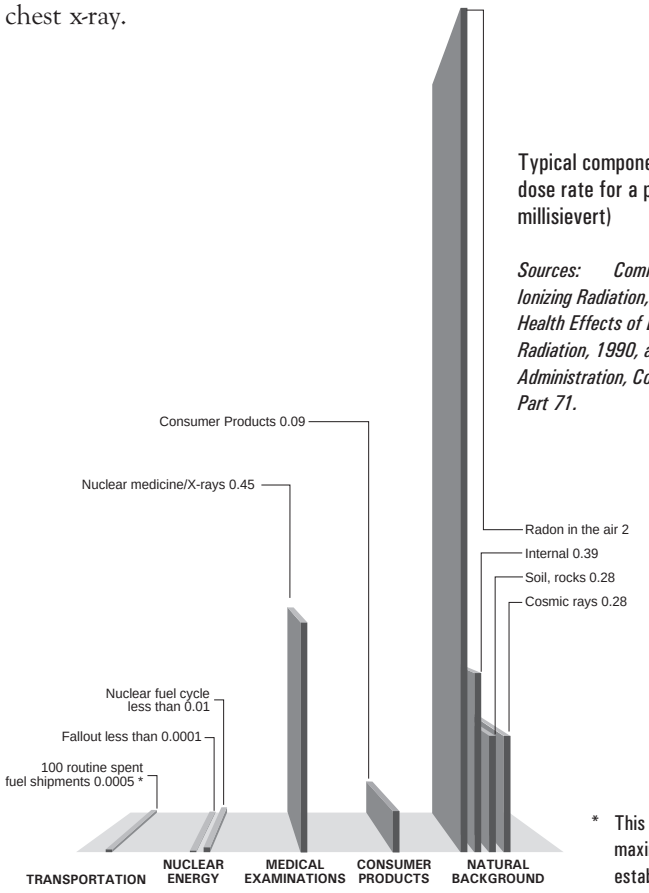

Typical components of the average annual radiation dose rate for a person living in the United States (in millisievert)

Sources: Committee on the Biological Effects of Ionizing Radiation, BEIR V: National Research Council, Health Effects of Exposure to Low Levels of Ionizing Radiation, 1990, and National Archives and Records Administration, Code of Federal Regulations, Title 10, Part 71.

* This calculation based on maximum exposure rate established in 10 CFR 71.

People living close to a transport route (less than 30.5 meters/ 100 feet away) of a vehicle containing the highest level or greatest quantity of radioactive materials (spent fuel or high-level waste) would receive 0.000005 millisievert (0.0005 millirem) per routine shipment.

Are State and Tribal authorities notified of DOE radioactive materials shipments?

On all shipments of high-level radioactive waste and spent fuel, State and Tribal authorities are provided advanced notice. This written notice includes the planned schedule(s), route, shipment description, and carrier's name and address.

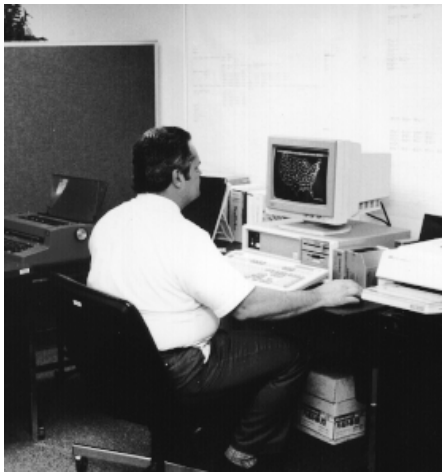

Trained personnel can pinpoint vehicles' locations and communicate with vehicle drivers.

DOE provides the Governor or the Governor's designee written notice in advance of unclassified spent fuel and high-level waste shipments within or through the State. NRC regulations do not include provisions for Tribal government notification of such shipments. However, DOE has elected, by policy, to notify Tribal governments of DOE HRCQ shipments through their jurisdictions. NRC is in the process of changing requirements to include Tribes under their notification rule.

DOE will provide NRC authorization to notify and to provide States and Tribes the capability to monitor its shipments using DOE's Transportation Tracking and Communications system, TRANSCOM. The system uses communications equipment and a satellite positioning/reporting system to monitor movement of selected shipments and enables State and Tribal users to follow the progress of unclassified shipments of spent fuel, high-level radioactive waste, and other high-visibility shipments as they approach and move through their jurisdictions.

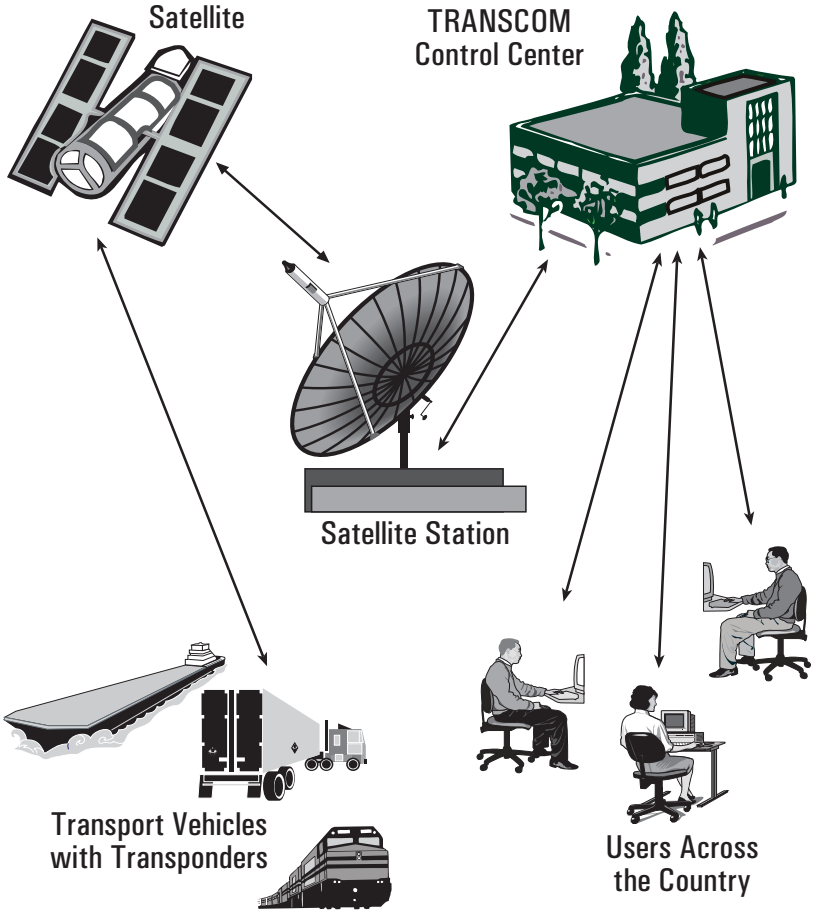

TRANSCOM uses communications equipment and a satellite positioning/reporting system to monitor the location and status of certain high-visibility shipments.

What responsibilities do State, Tribal, and local governments have in radioactive materials transport?

State, Tribal, and local governments may pass legislation specifying requirements for transporters of radioactive materials within their jurisdictions. These laws may stand if they are consistent with Federal laws, and if they do not impede commerce or business. Examples of State, Tribal, and local requirements include carrier permits and fees and restriction on hours of travel. State, Tribal, and local governments also provide input to proposed Federal regulations and participate in planning activities affecting them.

State and Tribal governments also may designate alternate routes using DOT guidelines.

In cases where State and Tribal government policies conflict, they may enter into transportation agreements. These agreements address a variety of transportation issues, such as road construction and maintenance, Tribal adoption of State statutes, and formal State requirements to involve Tribes in emergency response training.

State, Tribal, and local emergency response personnel are the first on-scene responders to transportation accidents. State, Tribal, and local governments develop emergency response plans that outline specific procedures, designate special response teams, and offer special training in material identification, regulations, response procedures, and personal protection. This prepares the emergency responders to deal effectively with an accident involving radioactive materials.

In addition, State, Tribal, and local enforcement personnel are responsible for conducting vehicle inspections both in terminals and along roadsides.

Local emergency response systems are in place to respond quickly and effectively in the event of a transportation accident.

State, Tribal, and local governments are responsible for the safety of their residents and other persons within their jurisdictions. Their activities include establishing legislation, designating alternate routes, emergency response, vehicle inspection, enforcement of traffic laws, and highway construction and maintenance.

Who responds to an accident involving a shipment of radioactive materials?

As with any traffic accident, the local, Tribal, and State police; fire departments; and rescue squads are first to respond to transportation accidents involving radioactive materials.

First responders cordon off contaminated areas and initiate controls to minimize further release of contaminated or radioactive material. They also perform life-saving duties, extinguish fires, clear unauthorized people from the immediate area, and control traffic in the event of an accident. Local responders usually contact State public health agencies. These agencies have trained personnel to conduct radiological tests at the site to determine if any radioactive material releases have occurred. Many local and State governments have emergency plans and training programs to prepare first responders for transportation accidents involving radioactive materials.

DOE maintains eight Regional Coordinating Offices (RCOs) across the country. Staffed 24 hours a day, 365 days a year, they are prepared to offer advice and assistance. They also ensure that appropriate State and Tribal agencies are contacted and coordinate any necessary Radiological Assistance Program team activities. These teams include nuclear engineers, health physicists, industrial hygienists, public affairs specialists, and other personnel who provide field monitoring, sampling, decontamination, communications, and other services as requested.

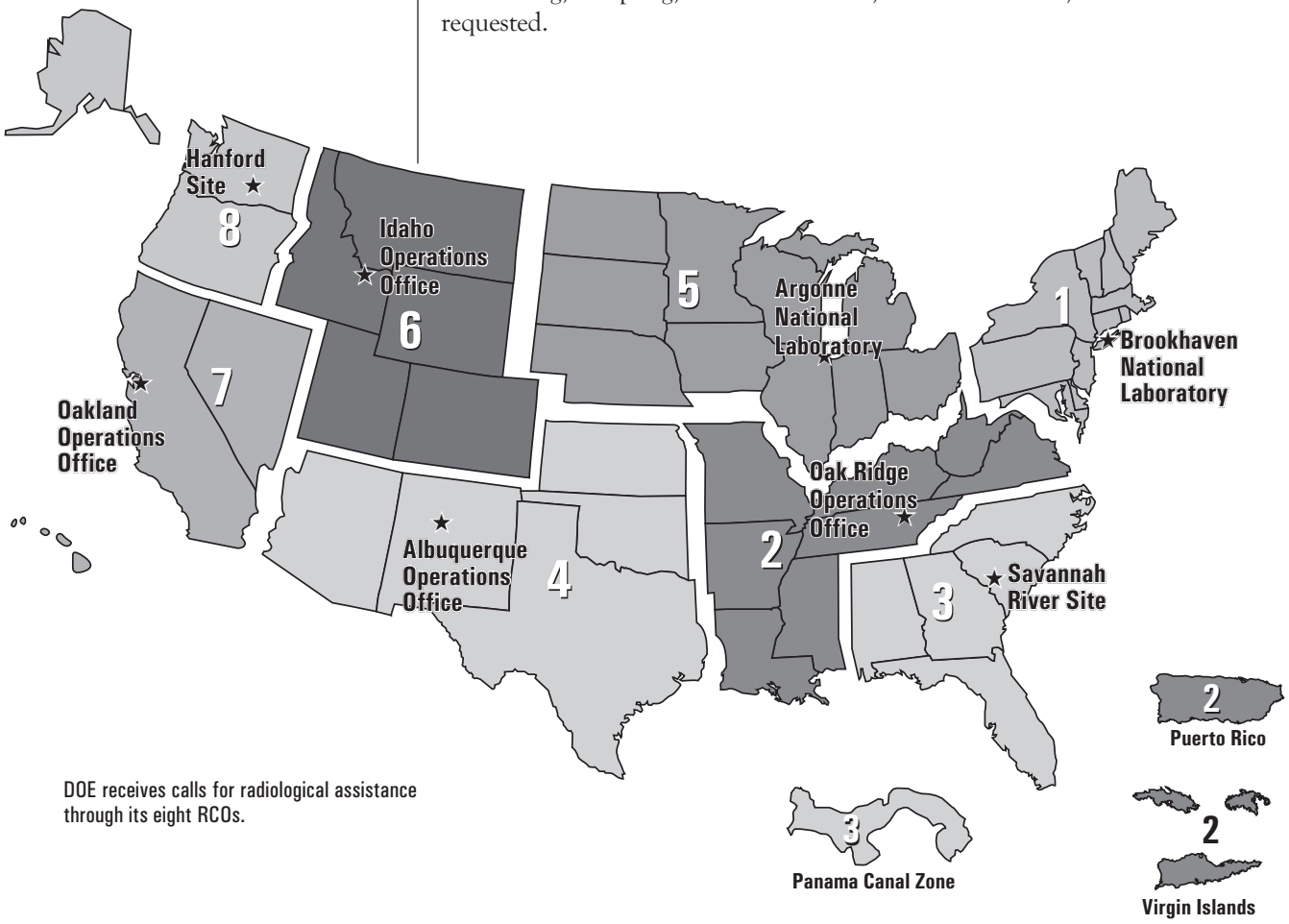

DOE receives calls for radiological assistance through its eight RCOs.

DOE offers training courses designed to teach basic emergency response procedures for dealing with radioactive materials. Assistance and emergency response training are also provided by the Federal Emergency Management Agency, DOT, NRC, and EPA. Assistance is also offered by the chemical industry through the Chemical Transportation Emergency Center (CHEMTREC). The National Response Center works closely with CHEMTREC on emergency calls and activates National Response Teams, if necessary.

Electric utilities operating nuclear power plants have voluntary assistance agreements with other utilities so that a utility near the scene of a transportation accident would respond on behalf of the utility shipping the radioactive material.

The carrier of the cargo works with the appropriate Government agencies to address all cleanup issues, such as arranging for repackaging of the cargo, if necessary, and disposing of contaminated materials.

These responders may request support from Federal agencies, if needed.

Transportation accident exercises provide participants with an opportunity to test and improve their emergency response planning and procedures.

How is liability coverage provided for transportation accidents?

Public Law 95-256, better known as the Price-Anderson Act, was passed by Congress in 1957. Most recently amended in 1988, it requires the nuclear industry (including DOE) to provide financial protection to the public in the unlikely event of a major nuclear accident.

The required amount of liability coverage for carriers of radioactive materials varies according to the mode of transport (road, rail, waterway, or air) and the type and quantity of radioactive material being shipped. If the damages from a transportation-related accident exceed the amount of the carrier's private insurance coverage, umbrella coverage is provided under the Price-Anderson Act.

Coverage is also provided for damages created as a result of terrorism, sabotage, and other illegal acts occurring during transport. In addition, the 1988 amendments clarified coverage for the costs of precautionary evacuation initiated by State, Tribal, or local officials.

If damage claims from an accident exceed the maximum limits of protection, Congress will review the incident and enact legislation to provide full and prompt public compensation.

In the event of a transportation accident involving radioactive materials, financial protection is available through the carrier and the U.S. Government.

Could someone sabotage radioactive materials shipments?

In general, the higher the potential consequences from a shipment of radioactive materials being stolen or sabotaged, the more stringent are the safeguards for its protection.

The weight of the casks used to transport high-level radioactive materials would discourage most would-be hijackers from attempting to remove the cask from the vehicle. These casks can weigh more than 100 metric tons (98 tons) and have steel walls up to 30.5 centimeters (1 foot) thick or the equivalent.

In addition, high-level radioactive materials are transported under strict regulatory controls established by the NRC and DOT. Under NRC rules, the Governor of a State or the Governor's designee is prenotified of unclassified spent nuclear fuel and high-level radioactive waste shipments within or through that State. DOE also provides advance notification to Tribal governments.

Under certain conditions, armed escorts either follow or ride in the truck cab or in a railcar. Other safety measures may include devices that can shut down or immobilize the transport vehicle in case of a sabotage attempt. DOE monitors its high-level radioactive waste and spent fuel shipments through a satellite-based tracking system.

High visibility shipments, such as cesium-137, are monitored and tracked by a sophisticated communications system.

Sabotage of high-level radioactive material is unlikely because of safeguard and security measures imposed on such shipments. Should an act of sabotage be attempted, the consequences are expected to be minor due to the protective nature of the cask.

How many radioactive materials transportation accidents have occurred and what were the consequences?

Between January 1971 and December 1998, 401 transportation accidents involved radioactive materials or their containers, according to a DOE database that tracks accident information.

Like other kinds of shipments, radioactive materials in transit have been involved in accidents or incidents. In most cases, there was no release of any radioactive material into the environment. When releases have occurred, the material has been cleaned up with no identifiable harm to people or to the environment. No one has ever been killed or seriously injured in an accident involving radioactive materials as a result of the radioactive nature of the cargo.

Between 1971 and 1998 in the United States, 56 transportation accidents involving Type B packages occurred. This represents approximately 14 percent of all transportation accidents involving radioactive materials or their containers. In only one case did a Type B package fail to contain its contents. In an incident that was the result of human error, a radiography camera (used to inspect welds on pipes) that had not been properly sealed and secured, fell from a truck. The capsule inside was dislodged, but caused no harm to the public or damage to the environment. Eight spent fuel shipments have been involved in accidents. One accident resulted in damage to an empty Type B spent fuel packaging. In that accident, the truck turned over and the packaging absorbed most of the impact. Although the truck was severely damaged, the packaging sustained minor damage. No radioactive materials were released, and the packaging was loaded on another truck and taken to its destination.

Within the same timeframe, the remaining 86 percent of such accidents involved Type A packages and Strong-tight packages. These types of packagings are designed and tested for normal transport conditions; they are not designed or tested to withstand accident conditions. Some of these accidents resulted in small releases of radioactivity. However, the material was cleaned up, and there was no harm to the public or damage to the environment.

This truck tipped over as it merged onto the interstate. The 49,000-pound package, carrying low-level waste, fell off the truck but did not open.

Photo Credit: Rex Perry, The Tennessean

How does DOE involve the public in its programs?

In addition to the formal National Environmental Policy Act process of Environmental Assessments, Environmental Impact Statements, and public meetings for actions which could adversely affect the environment, DOE solicits and incorporates public opinion related to its transportation programs in other ways.

All DOE programs with significant transportation activities participate in the Transportation External Coordination Working Group (TEC/WG). Other members include representatives from State, Tribal, and local government; industry; and professional organizations. Twice a year, members meet to discuss DOE transportation activities and public concerns. After each meeting, participants report to their respective organizations to distribute information and to obtain additional input for DOE.

The TEC/WG focuses on six broad transportation areas:

- Transportation Operations,
- General Planning,
- Emergency Preparedness,
- Training,
- Technical Assistance, and
- Public Information and Education.

DOE also works with regional and State organizations and Tribal governments on transportation issues.

Public input is very important to DOE's transportation programs, and the Transportation External Coordination Working Group is a major part of its public involvement efforts.

Public participation is a critical part of the DOE decisionmaking process.

Where can I find additional information about transporting radioactive materials?

U.S. DEPARTMENT OF ENERGY

U.S. Department of Energy
Office of Scientific and Technical Information
P.O. Box 62
Oak Ridge, TN 37831
(423) 576-1188
Website: http://www.osti.gov/ostipg.html

For more information on DOE's transportation programs, contact:

National Transportation Program
U.S. Department of Energy
Albuquerque Operations Office
P.O. Box 5400, MS SC-5
Albuquerque, NM 87185-5400
(505) 845-6134
Website: http://www.ntp.doe.gov/

Center for Environmental Management Information
P.O. Box 23769
Washington, DC 20026-3769
1-800-736-3282
(202) 863-5084
Website: //www.em.doe.gov/

Transportation Resource Exchange Center
ATR Institute
University of New Mexico
1001 University Blvd., SE
Albuquerque, NM 87106-4342
1-877-287-TREX (8739)
E-mail: trex@unm.edu
Website: http://www.unm.edu/~trex

For information on Transuranic Waste Transportation to WIPP, contact:

U.S. Department of Energy
National Transuranic Waste Program
Carlsbad Area Office
P.O. Box 3090
Carlsbad, NM 88221-3090
1-800-336-WIPP (9477)
Website: http://www.wipp.carlsbad.nm.us/

For information on DOE's transportation program for spent fuel and high-level radioactive waste to a geologic repository or an interim storage facility, contact:

U.S. Department of Energy
Office of Civilian Radioactive Waste Management
Yucca Mountain Site Characterization Project
1-800-225-6972
Website: http://www.ymp.gov/

OTHER GOVERNMENT AGENCIES AND FACILITIES

National Technical Information Service
Technology Administration
U.S. Department of Commerce
Springfield, VA 22161
(703) 605-6000
Website: http://www.ntis.gov/

U.S. Environmental Protection Agency
Information Resources Center
401 M Street, SW
Washington, DC 20460
(202) 260-5922
Website: http://www.epa.gov/

U.S. Nuclear Regulatory Commission
Office of Nuclear Materials Safety and Safeguards
Washington, DC 20555
(301) 415-7800
Website: http://www.nrc.gov/

U.S. Department of Transportation
Research and Special Programs Administration
Hazardous Materials Information Center
400 Seventh Street, SW
Washington, DC 20590
(202) 366-4488
Website: http://www.dot.gov/

Federal Emergency Management Agency
Public Affairs
500 C Street, SW
Washington, DC 20472
(202) 646-4600
Website: http://www.fema.gov/

NONGOVERNMENT

American Nuclear Society
555 North Kensington Avenue
La Grange Park, IL 60526
(708) 352-6611
Website: http://www.ans.org/

American Trucking Associations
Information Center
2200 Mill Road
Alexandria, VA 22314-4677
(703) 838-1880
Website: http://www.truckline.com

Association of American Railroads
50 F Street, NW
Washington, DC 20001-1564
(202) 639-2100
Website: http://www.aar.org/

Chemical Manufacturers Association
1300 Wilson Boulevard
Arlington, VA 22209
(703) 741-5000
Website: http://www.cmahq.com

International Atomic Energy Agency
c/o Bernan Associates
4611-F Assembly Drive
Lanham, MD 20706-4391
1-800-274-4447
Website: http://www.Bernan.com

Nuclear Energy Institute
1776 I Street NW
Suite 400
Washington, DC 20006-3708
(202) 739-8000
Website: http://www.nei.org/

Glossary

(Note: Full technical definitions are available on the NTP Website at http://www.ntp.doe.gov/)

Accident
A deviation from normal operations or activities associated with a hazard which has the potential to result in an emergency.

Alpha Particle
A positively charged particle given off by certain radioactive substances. Alpha particles travel short distances in the air before being absorbed and are easily shielded (stopped) with materials such as paper.

Beta Particle
An electron ejected at high velocity from the nucleus of an atom. These particles travel faster than alpha particles and can be stopped by aluminum foil or glass.

Cask
Heavy, multilayered, container used to ship or store radioactive materials containing high levels of radioactivity. A cask is an example of Type B packaging.

Excepted Packaging
Packaging used to transport materials with extremely low levels of radioactivity which must meet only general design requirements. Excepted packagings range from a product's fiberboard box to a sturdy wooden or steel crate, and typical shipments include limited quantities of materials, instruments, and articles such as smoke detectors.

Fuel Assembly
A bundle of rods containing small pellets of nuclear fuel used to produce electricity in a power plant.

Fuel Element
Two general types of fuel elements are used in research reactors. The box-type typically contains 6 to 23 fuel plates, and the cylindrical-type consists of 3 to 13 tubes. Both are composed of the fuel matrix which holds the enriched uranium and which is protected and confined by the cladding. Structural hardware holds all the pieces of the fuel element together in the proper configuration.

Gamma Rays
The most penetrating type of ionizing radiation, gamma rays are produced by the reactions of nuclei or by the interaction of high-energy electrons with matter. These waves of pure energy travel at the speed of light. Concrete, lead, or steel is used to shield (stop) gamma rays.

High-Level Waste
The radioactive waste that results from the processing of spent fuel. High-level waste is a residue consisting of fission products and transuranic waste.

Industrial Packaging
Packaging used to transport materials which present a limited hazard to the public and environment. Examples of these materials are contaminated equipment and radioactive waste solidified in materials such as concrete. These packages are grouped into three categories (IP-1, IP-2, and IP-3), based on the strength of the packaging.

Isotope
Atoms of the same element that have the same number of protons but a different number of neutrons. A single element may have many isotopes.

Low-Level Waste
Radioactive material that is not high-level radioactive waste, spent nuclear fuel, transuranic waste, or byproduct material. It usually contains small amounts of short-lived radioactive waste dispersed in large quantities of material. Typical low-level waste consists of used protective clothing, rags, tools and equipment, used resins and residues, dirt, concrete, construction debris, and scrap metal.

Millirem
A unit measuring radiation's effect on the human body, equal to one-thousandth of a rem.

Millisievert
A metric unit measuring radiation's effect on the human body equal to one-thousandth of a sievert. One millisievert equals 100 millirem.

Mixed Waste
Waste containing both radioactive and hazardous components as defined by the Atomic Energy Act and the Resource Conservation and Recovery Act.

Nuclide
A specific type of atom that is characterized by its nuclear properties. The term is often erroneously used as a synonym for "isotope." Whereas isotopes are various forms of a single element and all have the same atomic numbers, nuclides comprise all the isotopic forms of all the elements.

Package
The packaging and its radioactive contents as presented together for transport.

Packaging
For radioactive materials, the assembly of components necessary to ensure compliance with the packaging requirements of 49CFR173. It may consist of one or more receptacles, absorbent materials, spacing structures, thermal insulation, radiation shielding, and devices for cooling or absorbing mechanical shocks. The conveyance, tie-down system, and auxiliary equipment may sometimes be designated as part of the packaging.

Price-Anderson Act
Legislation outlining methods for compensating nuclear power plant or nuclear transportation accident victims. Passed as Subsection 170 of the Atomic Energy Act of 1954, the Price-Anderson Act established a system in which a combination of Government guarantees and private insurance coverage would pay claims for personal injury and property damage caused by nuclear accidents.

Radiation
The energy, in the form of particles or rays, released as unstable isotopes change to become more stable.

Radioactive Contamination
Radioactive material dispersed in materials or places where it is undesirable.

Radioactive Waste
Solid, liquid, or gaseous material that contains, or is contaminated with, radionuclides regulated under the Atomic Energy Act of 1954, as amended. These byproducts result from using, refining, or processing radioactive material.

Radioactivity
The property of an unstable isotope which decays by releasing energetic particles or waves of energy.

Radionuclide
See nuclide.

Rem
Acronym for "roentgen equivalent man," which is a dosage of any ionizing radiation that will produce a biological effect approximately equal to that produced by one roentgen of X-ray or gamma ray radiation.

Shielding
Materials, such as concrete, water, and lead, that are placed around radioactive sources to protect people and the environment from radiation.

Sievert (SV)
Unit of radiation dosage that equals 100 rem.

Spent Fuel
Used nuclear fuel that has been removed from a reactor. Spent fuel is highly radioactive.

Transport Index
The number placed on radioactive labels to designate the degree of control to be exercised by the carrier during transportation of a radioactive material. The Transport Index is determined as follows:

- the number expressing the maximum radiation level in millirem per hour at 1 meter (40 inches) from the external surface of the package, or

- for Fissile Class II or III shipments, the number expressing maximum radiation level at 1 meter from the package surface or the number obtained by dividing 50 by the number of packages which may legally be transported together, whichever is larger.

Transuranic Waste
Waste contaminated with radioactive elements heavier than uranium, thus the name trans (or beyond) uranic.

Type A Packaging
Packaging used to transport radioactive materials with concentrations of radioactivity not exceeding the limits established in *Title 49, Code of Federal Regulations*, Part 173.431. Typically, Type A packagings have an inner containment vessel made of glass, plastic, or metal and packing material made of polyethylene, rubber, or vermiculite. Examples of materials shipped in Type A packaging include radiopharmaceuticals and low-level radioactive waste.

Type B Packaging
Packaging used to transport materials with radioactivity levels higher than those allowed in Type A packaging, such as spent nuclear fuel and high-level radioactive waste. Limits on activity contained in a Type B package are provided in *Title 49, Code of Federal Regulations*, Part 173.431. Type B packagings range from small drums (208 liters /55 gallons) to heavily shielded casks that weigh more than 100 metric tons (98 tons).

Uranium Mill Tailings
Radioactive rock and soil byproducts resulting from uranium mining and milling.

Acronyms

CHEMTREC
Chemical Transportation Emergency Center

DOE
U.S. Department of Energy

DOT
U.S. Department of Transportation

EM
DOE's Office of Environmental Management

EPA
U.S. Environmental Protection Agency

HRCQ
Highway Route Controlled Quantity

IAEA
International Atomic Energy Agency

IP
Industrial Packaging

LSA
Low-Specific Activity

NRC
U.S. Nuclear Regulatory Commission

RCO
Regional Coordinating Office

REM
roentgen equivalent man

TEC/WG
Transportation External Coordination Working Group

WIPP
Waste Isolation Pilot Plant