Hanford ER Disposition Map

Dataset: IPABS-IS (8/28/01)

PREDECISIONAL DRAFT

This map is conceptual and in many cases does not represent cleanup or transfer decisions; this map does not preclude the on-going regulatory and stakeholder decision-making processes.

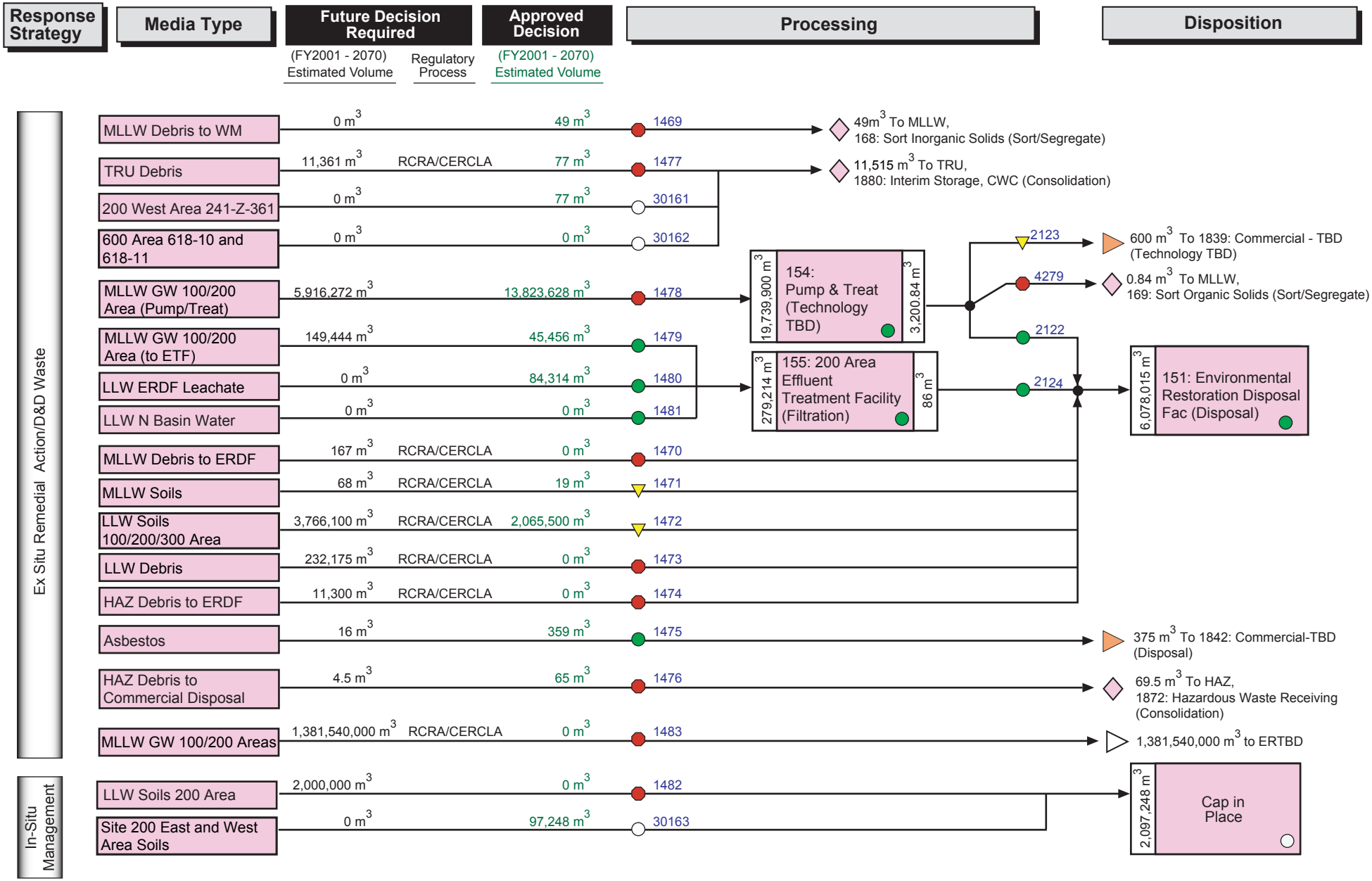

Hanford HAZ Disposition Map

Dataset: IPABS-IS (8/28/01)

PREDECISIONAL DRAFT

This map is conceptual and in many cases does not represent cleanup or transfer decisions; this map does not preclude the on-going regulatory and stakeholder decision-making processes.

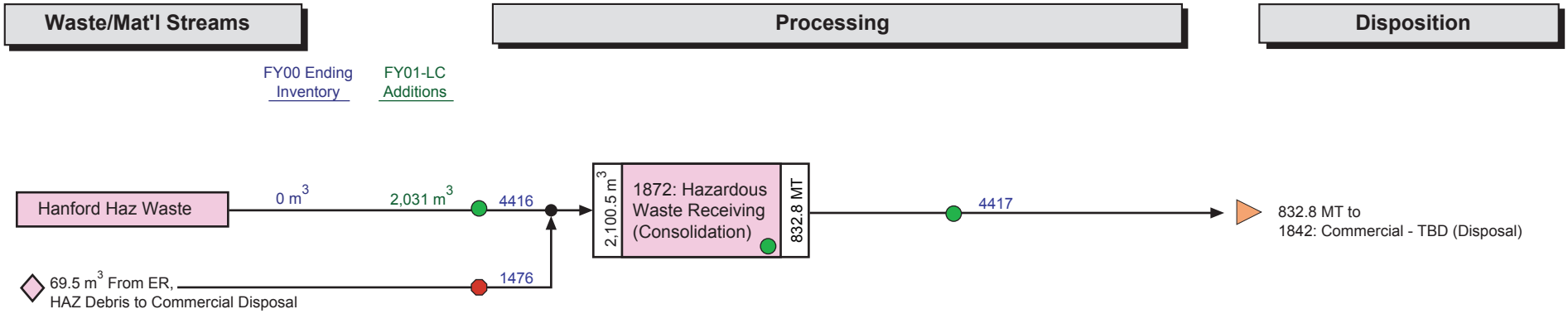

KEY: Albuquerque | Carlsbad | Chicago | Commercial | Idaho | Nevada | Oak Ridge | Oakland | Ohio | Richland | Rocky Flats | SRS | Other | Unknown | Off-site Interface: ▷ | On site Interface: ◇

● Maximum Programmatic Risk Score of 1 for a stream/TSD System

▼ Maximum Programmatic Risk Score of 2 or 3 for a stream/TSD System

● Maximum Programmatic Risk Score of 4 or 5 for a stream/TSD System

○ No Programmatic Risk Score for a stream/TSD System

Rev. 6.0
10/5/01

Dataset: IPABS-IS (8/28/01)

Office of River Protection HLW Disposition Map

PREDECISIONAL DRAFT

This map is conceptual and in many cases does not represent cleanup or transfer decisions; this map does not preclude the on-going regulatory and stakeholder decision-making processes.

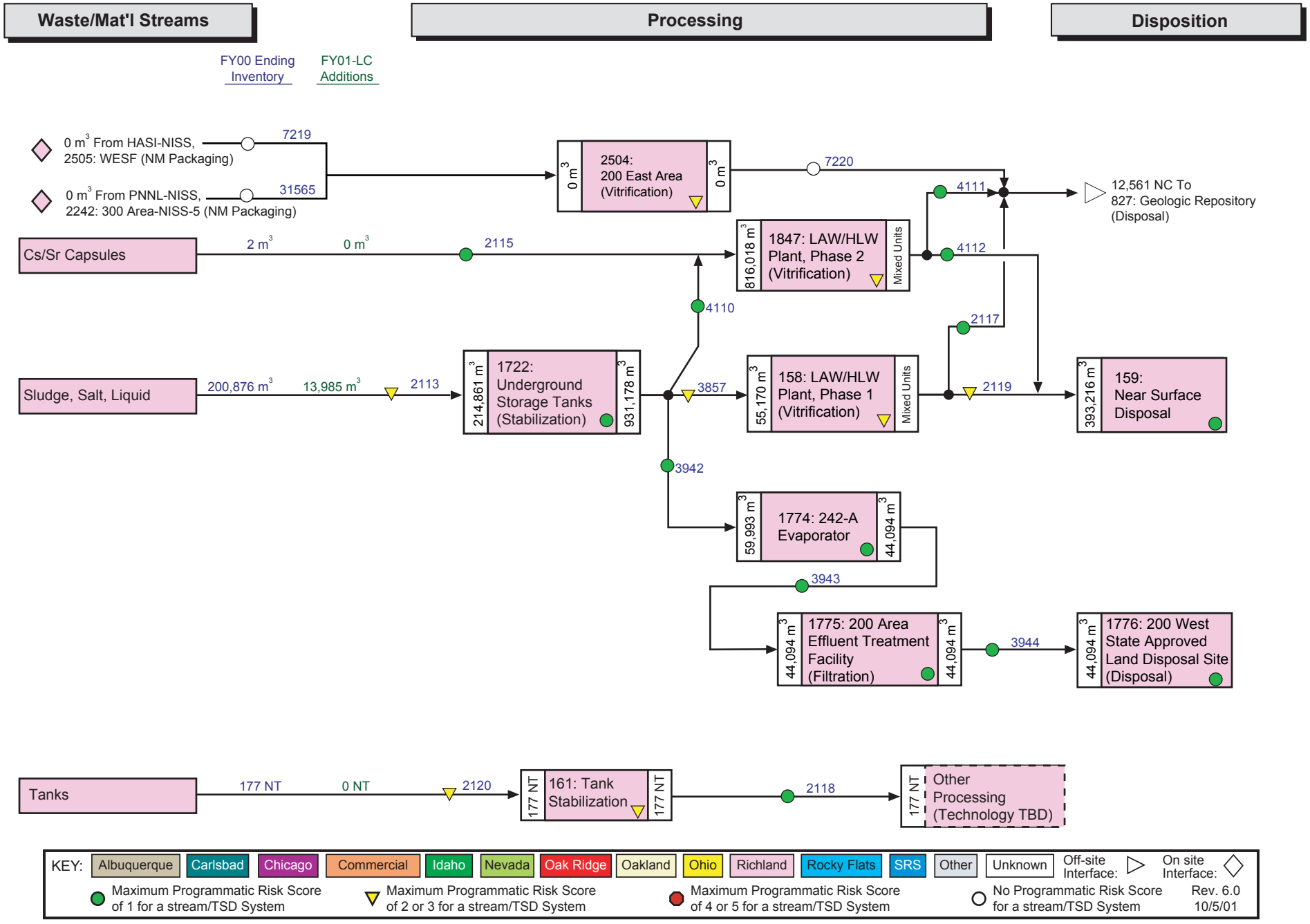

Hanford LLW Disposition Map

Dataset: IPABS-IS (8/28/01)

PREDECISIONAL DRAFT

This map is conceptual and in many cases does not represent cleanup or transfer decisions; this map does not preclude the on-going regulatory and stakeholder decision-making processes.

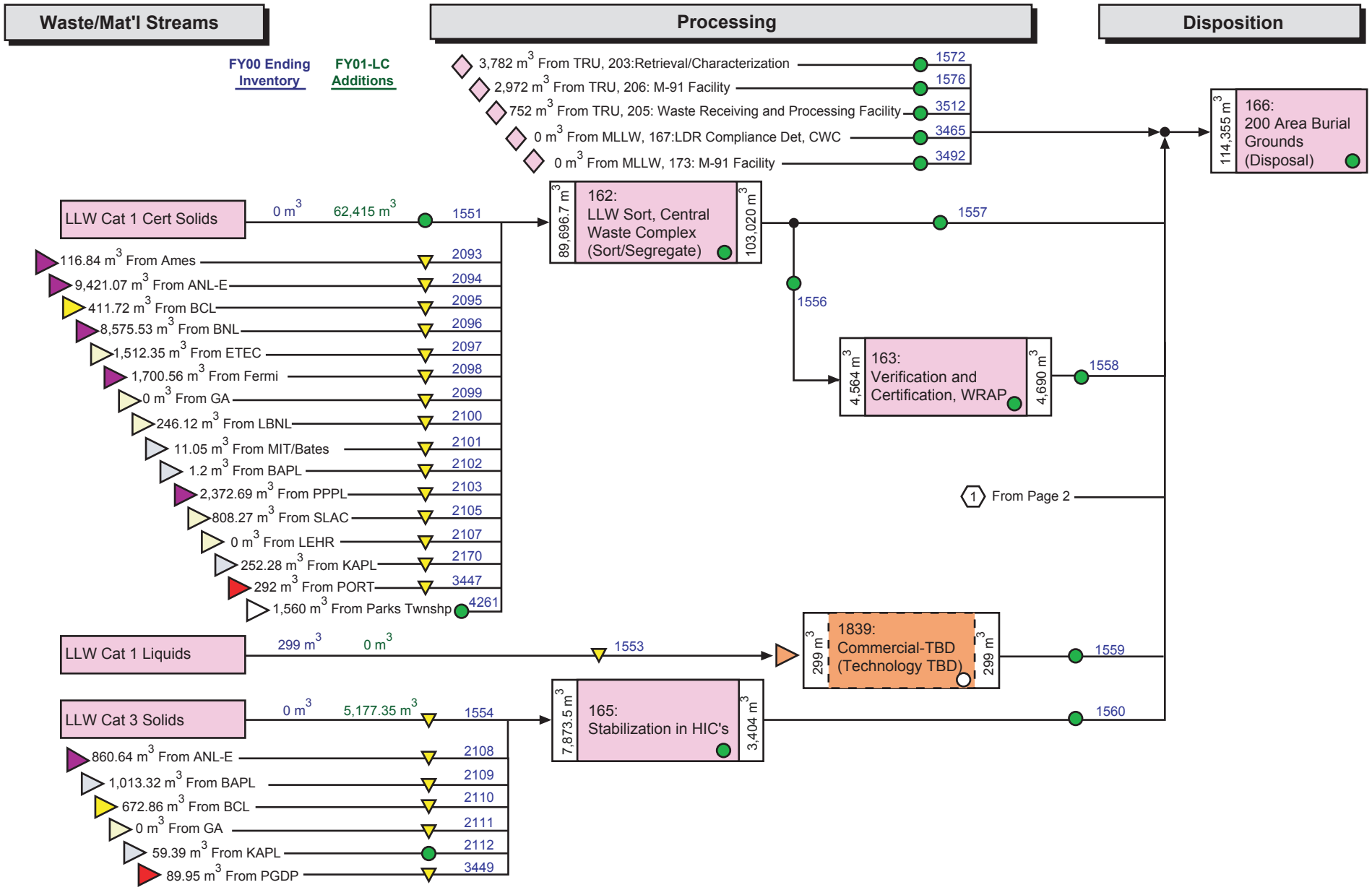

Hanford LLW Disposition Map

Dataset: IPABS-IS (8/28/01)

PREDECISIONAL DRAFT

This map is conceptual and in many cases does not represent cleanup or transfer decisions; this map does not preclude the on-going regulatory and stakeholder decision-making processes.

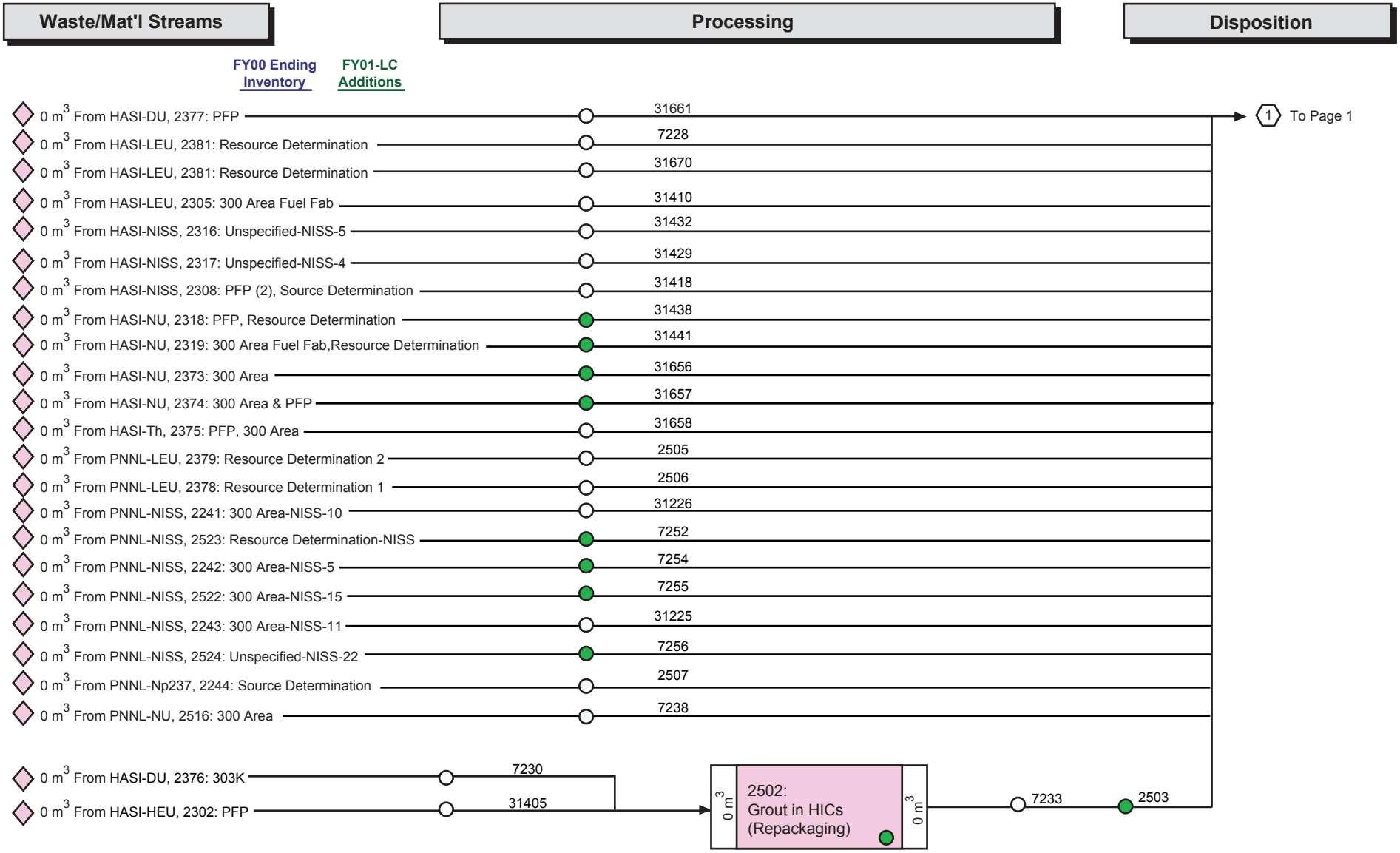

KEY: Albuquerque | Carlsbad | Chicago | Commercial | Idaho | Nevada | Oak Ridge | Oakland | Ohio | Richland | Rocky Flats | SRS | Other | Unknown | Off-site Interface: ▷ | On site Interface: ◇

● Maximum Programmatic Risk Score of 1 for a stream/TSD System

▼ Maximum Programmatic Risk Score of 2 or 3 for a stream/TSD System

● Maximum Programmatic Risk Score of 4 or 5 for a stream/TSD System

○ No Programmatic Risk Score for a stream/TSD System

Rev. 6.0
10/5/01

Dataset: IPABS-IS (8/28/01)

PREDECISIONAL DRAFT

This map is conceptual and in many cases does not represent cleanup or transfer decisions; this map does not preclude the on-going regulatory and stakeholder decision-making processes.

Hanford MLLW Disposition Map

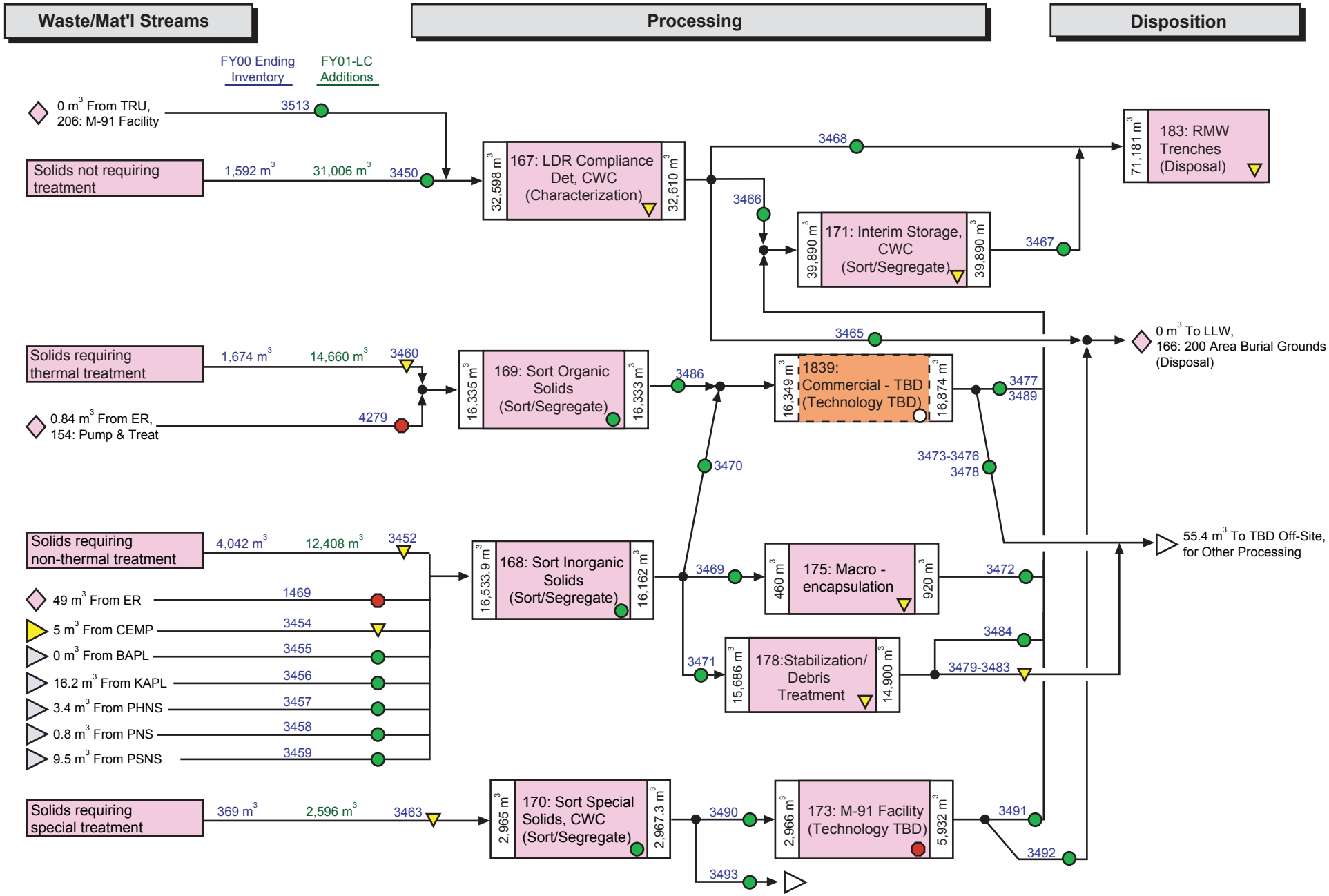

Hanford SNF Disposition Map

Dataset: IPABS-IS (8/28/01)

PREDECISIONAL DRAFT

This map is conceptual and in many cases does not represent cleanup or transfer decisions; this map does not preclude the on-going regulatory and stakeholder decision-making processes.

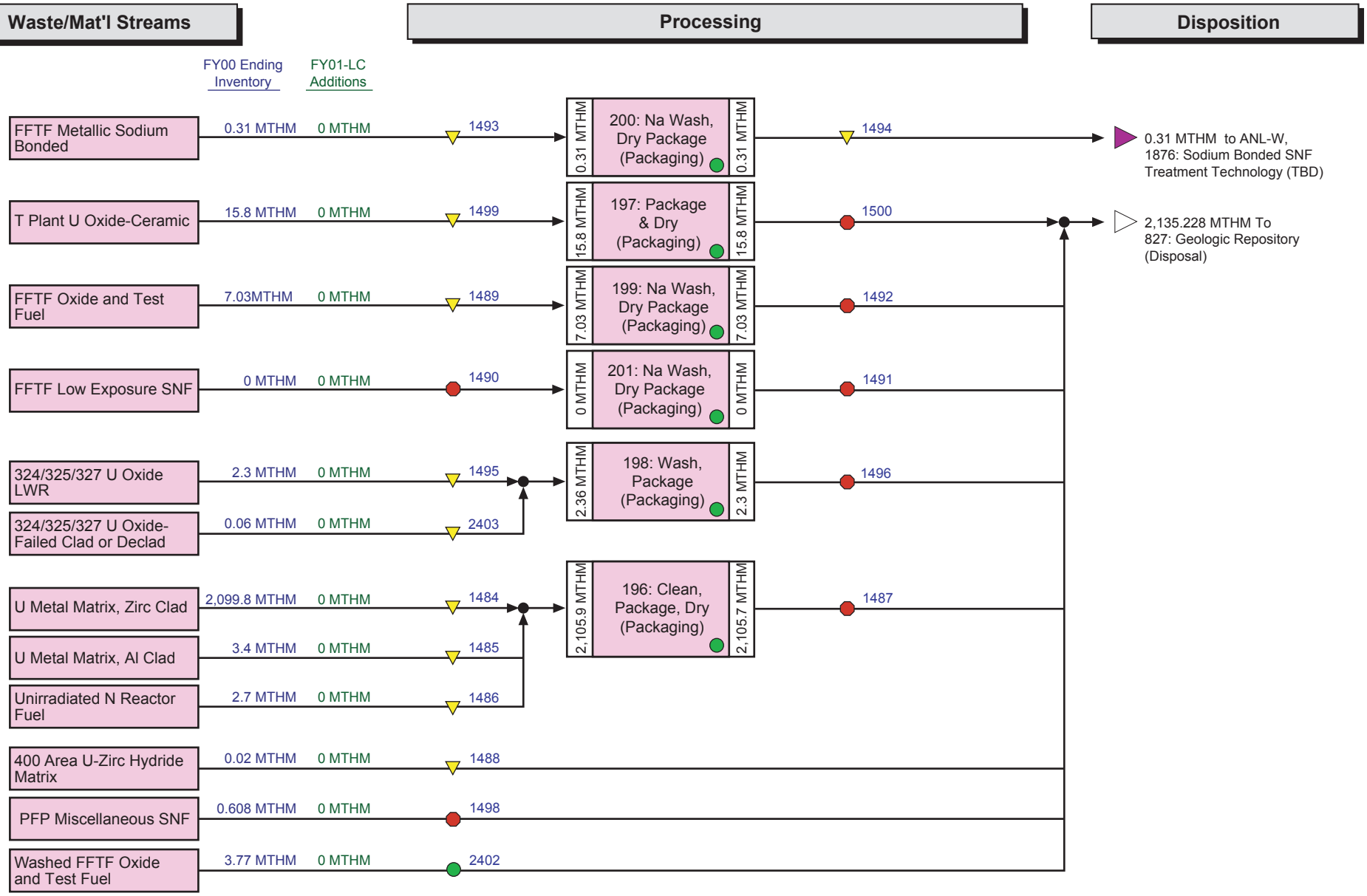

KEY: Albuquerque | Carlsbad | Chicago | Commercial | Idaho | Nevada | Oak Ridge | Oakland | Ohio | Richland | Rocky Flats | SRS | Other | Unknown | Off-site Interface: ▷ | On site Interface: ◇

● Maximum Programmatic Risk Score of 1 for a stream/TSD System

▼ Maximum Programmatic Risk Score of 2 or 3 for a stream/TSD System

⬢ Maximum Programmatic Risk Score of 4 or 5 for a stream/TSD System

○ No Programmatic Risk Score for a stream/TSD System

Rev. 6.0
10/5/01

Hanford TRU Disposition Map

Dataset: IPABS-IS (8/28/01)

PREDECISIONAL DRAFT

This map is conceptual and in many cases does not represent cleanup or transfer decisions; this map does not preclude the on-going regulatory and stakeholder decision-making processes.

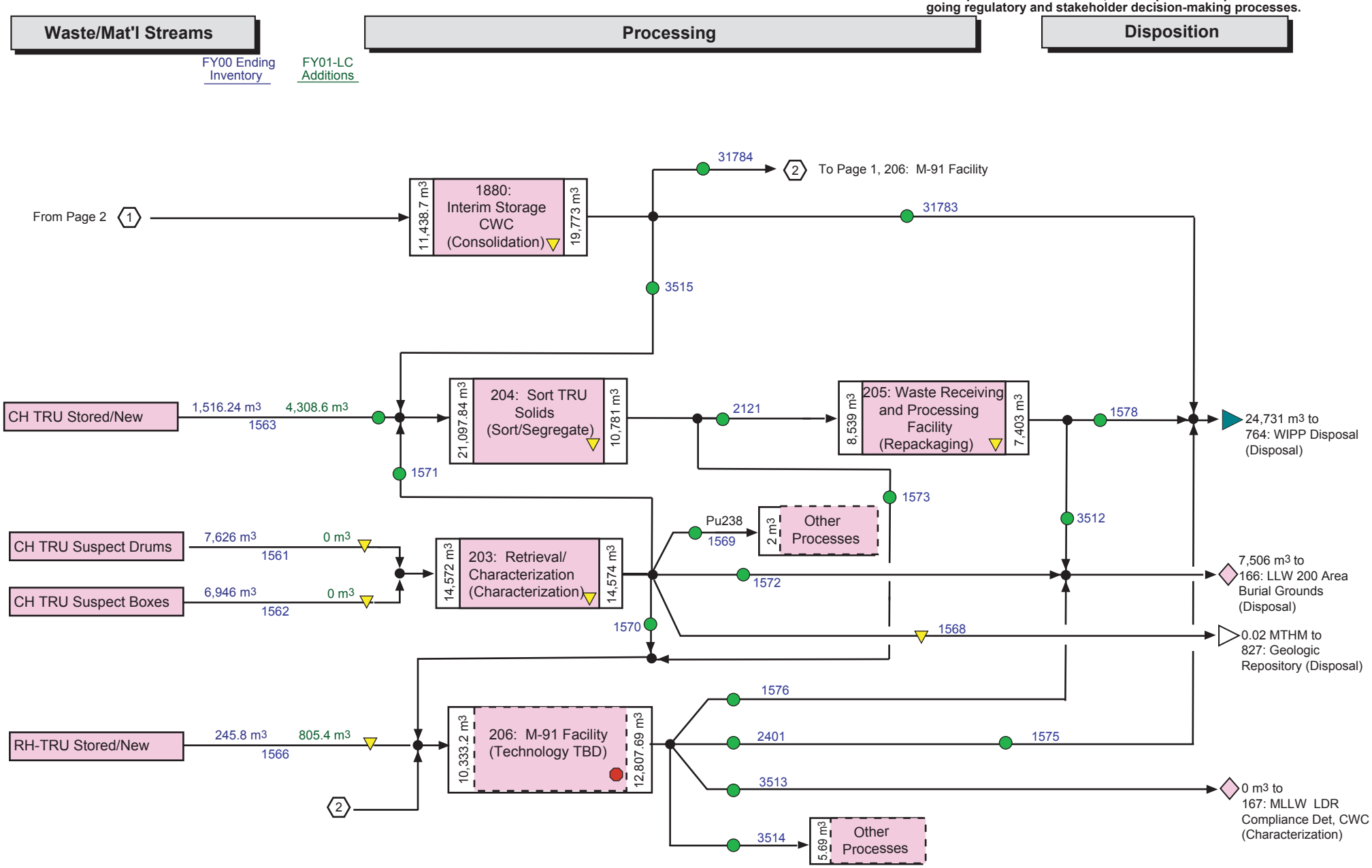

KEY: Albuquerque | Carlsbad | Chicago | Commercial | Idaho | Nevada | Oak Ridge | Oakland | Ohio | Richland | Rocky Flats | SRS | Other | Unknown | Off-site Interface: ▷ | On site Interface: ◇

● Maximum Programmatic Risk Score of 1 for a stream/TSD System

▼ Maximum Programmatic Risk Score of 2 or 3 for a stream/TSD System

⬢ Maximum Programmatic Risk Score of 4 or 5 for a stream/TSD System

○ No Programmatic Risk Score for a stream/TSD System

Rev. 6.0
10/5/01

Dataset: IPABS-IS (8/28/01)

PREDECISIONAL DRAFT

This map is conceptual and in many cases does not represent cleanup or transfer decisions; this map does not preclude the on-going regulatory and stakeholder decision-making processes.

Hanford TRU Disposition Map

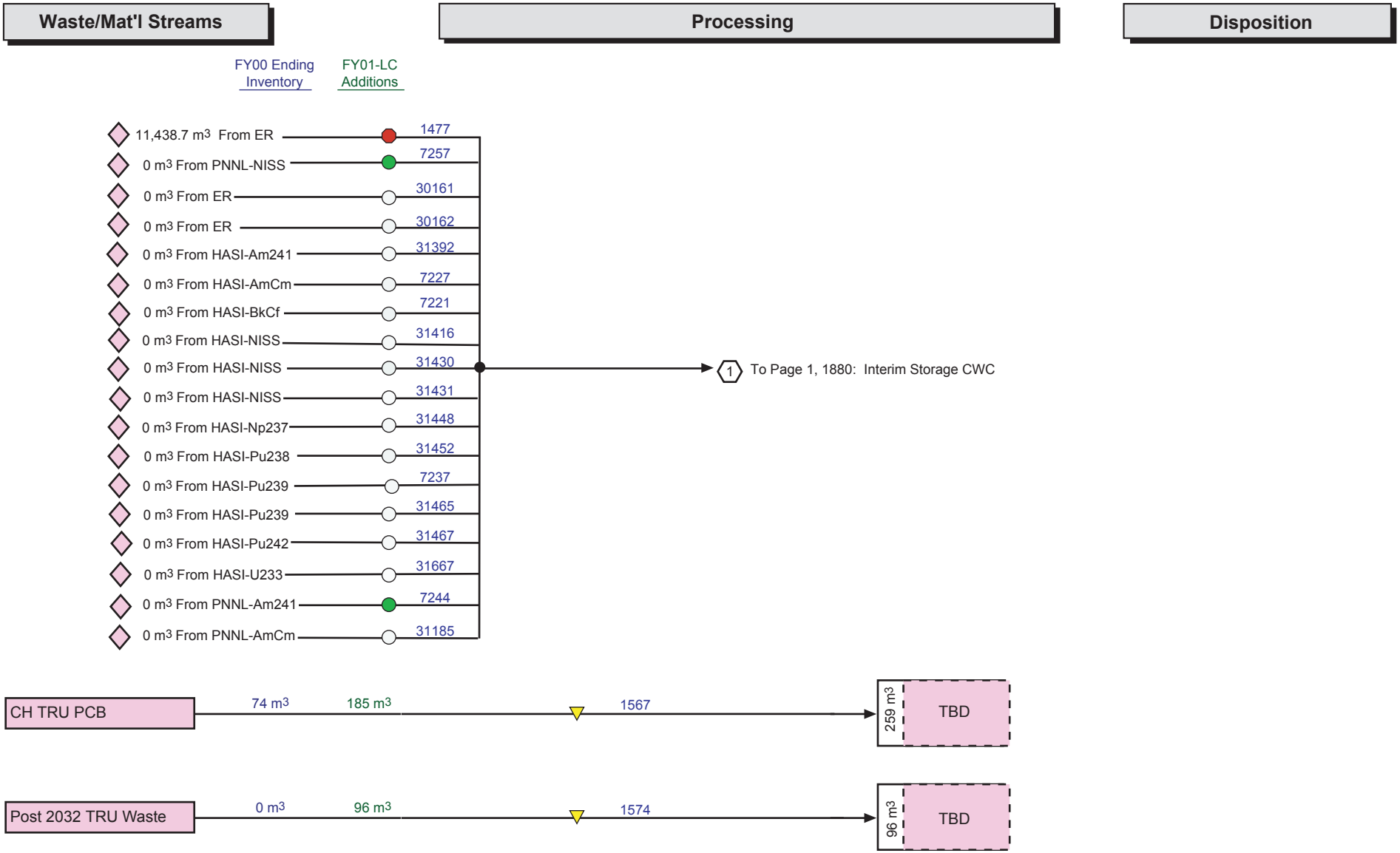

KEY: Albuquerque | Carlsbad | Chicago | Commercial | Idaho | Nevada | Oak Ridge | Oakland | Ohio | Richland | Rocky Flats | SRS | Other | Unknown | Off-site Interface: ▷ | On site Interface: ◇

● Maximum Programmatic Risk Score of 1 for a stream/TSD System

▼ Maximum Programmatic Risk Score of 2 or 3 for a stream/TSD System

● Maximum Programmatic Risk Score of 4 or 5 for a stream/TSD System

○ No Programmatic Risk Score for a stream/TSD System

Rev. 6.0
10/5/01