RMI (Ashtabula) ER Disposition Map

Dataset: IPABS-IS (8/28/01)

PREDECISIONAL DRAFT

This map is conceptual and in many cases does not represent cleanup or transfer decisions; this map does not preclude the on-going regulatory and stakeholder decision-making processes.

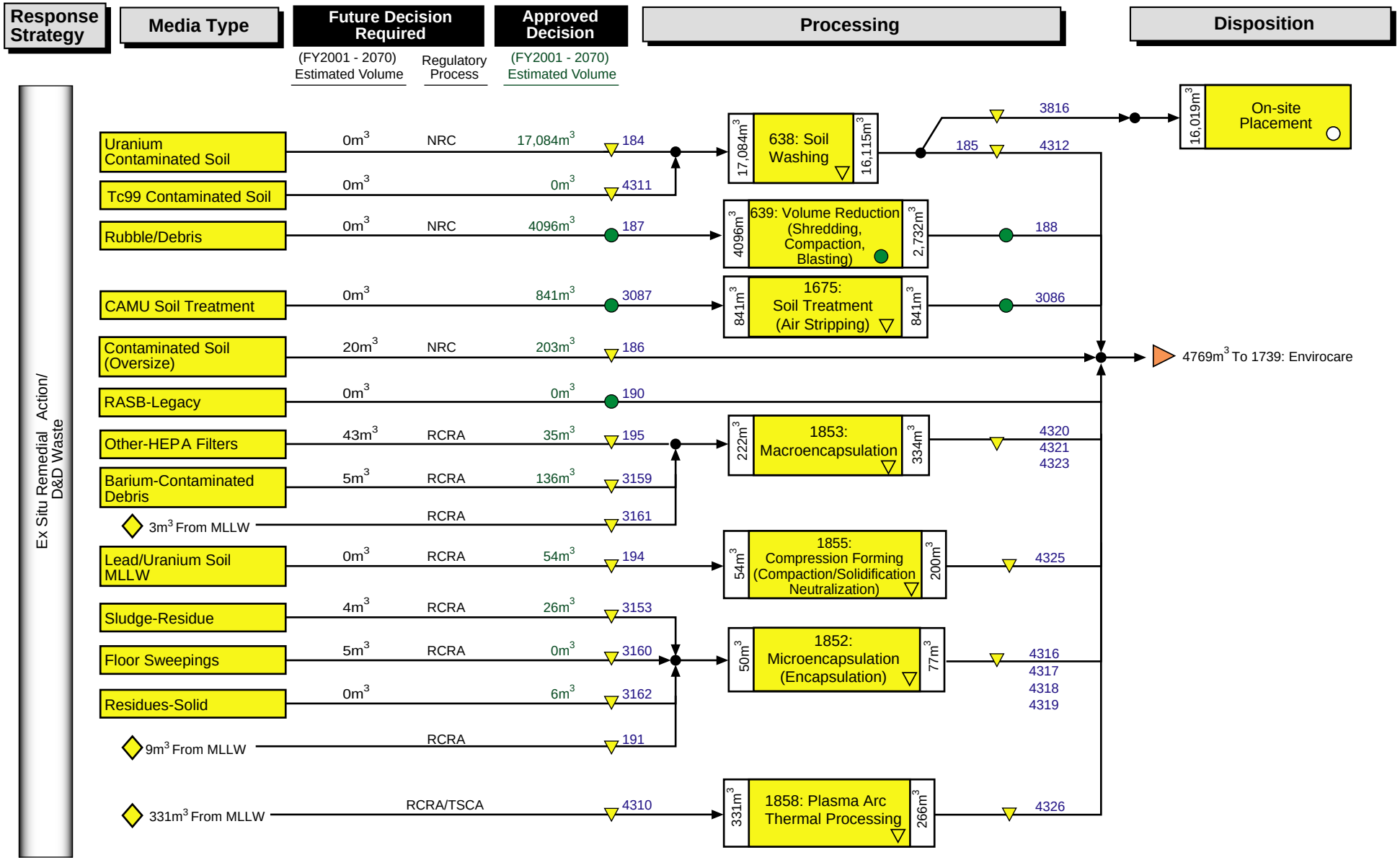

KEY: Albuquerque | Carlsbad | Chicago | Commercial | Idaho | Nevada | Oak Ridge | Oakland | Ohio | Richland | Rocky Flats | SRS | Other | Unknown | Off-site Interface: | On site Interface:

Maximum Programmatic Risk Score of 1 for a stream/TSD System

Maximum Programmatic Risk Score of 2 or 3 for a stream/TSD System

Maximum Programmatic Risk Score of 4 or 5 for a stream/TSD System

No Programmatic Risk Score for a stream/TSD System

Rev. 6.0
10/5/01

RMI (Ashtabula) ER Disposition Map

Dataset: IPABS-IS (8/28/01)

PREDECISIONAL DRAFT

This map is conceptual and in many cases does not represent cleanup or transfer decisions; this map does not preclude the on-going regulatory and stakeholder decision-making processes.

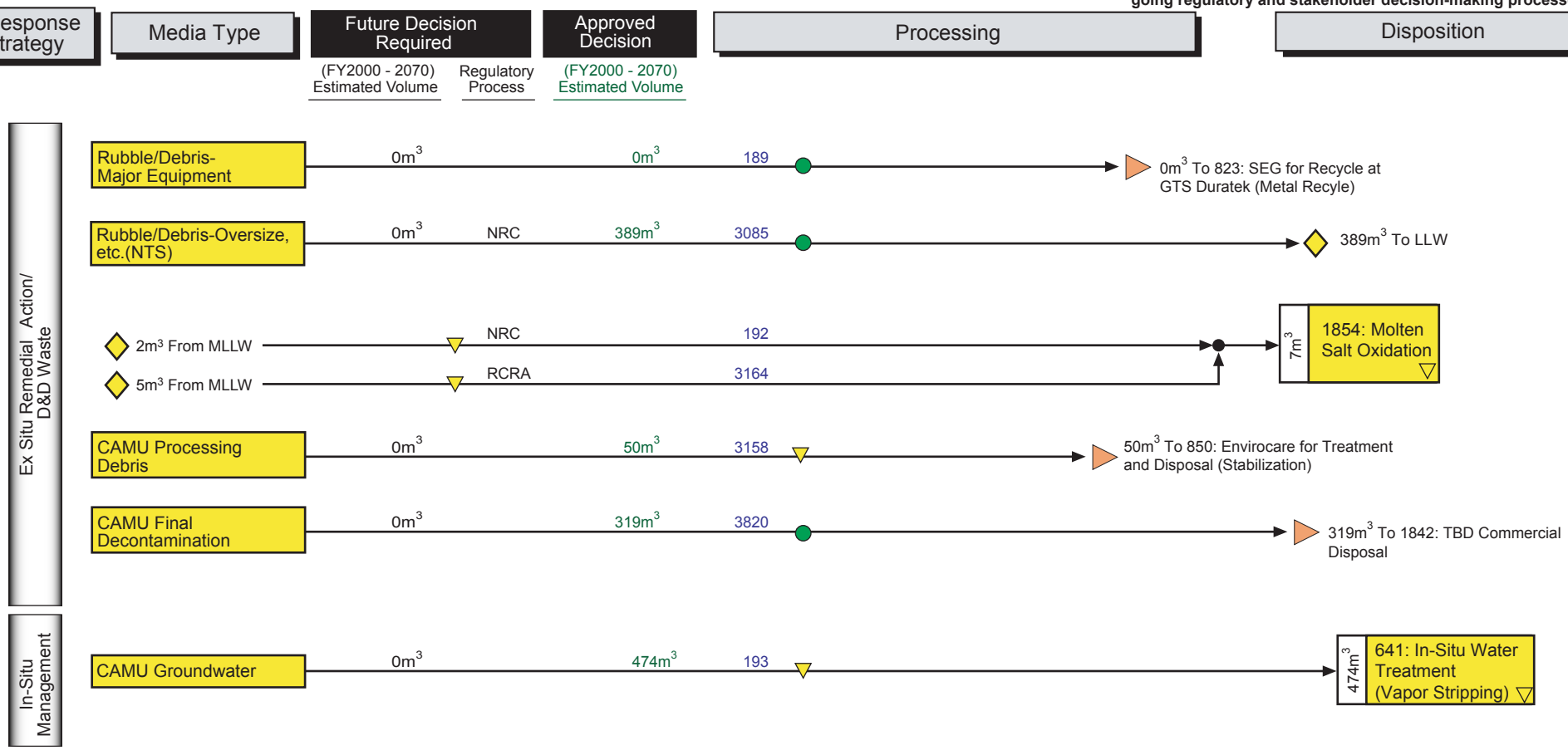

KEY: Albuquerque | Carlsbad | Chicago | Commercial | Idaho | Nevada | Oak Ridge | Oakland | Ohio | Richland | Rocky Flats | SRS | Other | Unknown | Off-site Interface: ▷ | On site Interface: ◇

● Maximum Programmatic Risk Score of 1 for a stream/TSD System

▼ Maximum Programmatic Risk Score of 2 or 3 for a stream/TSD System

● Maximum Programmatic Risk Score of 4 or 5 for a stream/TSD System

○ No Programmatic Risk Score for a stream/TSD System

Rev. 6.0
10/5/01

Dataset: IPABS-IS (8/28/01)

PREDECISIONAL DRAFT

This map is conceptual and in many cases does not represent cleanup or transfer decisions; this map does not preclude the on-going regulatory and stakeholder decision-making processes.

RMI (Ashtabula) LLW Disposition Map

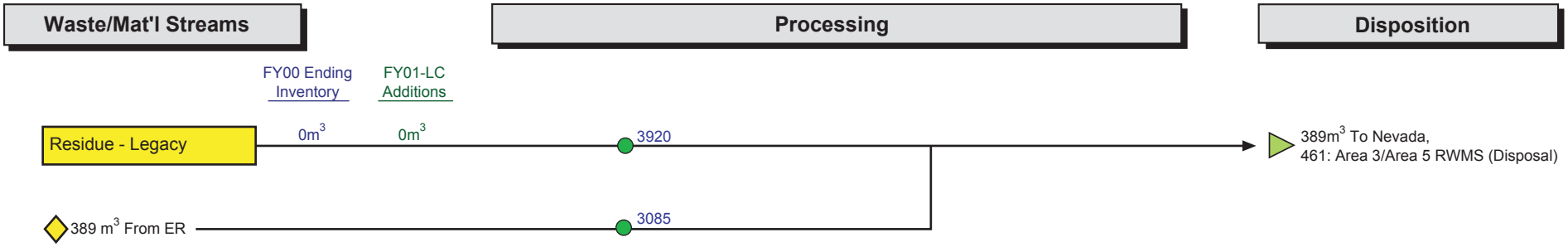

KEY: Albuquerque | Carlsbad | Chicago | Commercial | Idaho | Nevada | Oak Ridge | Oakland | Ohio | Richland | Rocky Flats | SRS | Other | Unknown | Off-site Interface: | On site Interface:

Maximum Programmatic Risk Score of 1 for a stream/TSD System

Maximum Programmatic Risk Score of 2 or 3 for a stream/TSD System

Maximum Programmatic Risk Score of 4 or 5 for a stream/TSD System

No Programmatic Risk Score for a stream/TSD System

Rev. 6.0
10/5/01

Dataset: IPABS-IS (8/28/01)

PREDECISIONAL DRAFT

This map is conceptual and in many cases does not represent cleanup or transfer decisions; this map does not preclude the on-going regulatory and stakeholder decision-making processes.

RMI (Ashtabula) MLLW Disposition Map

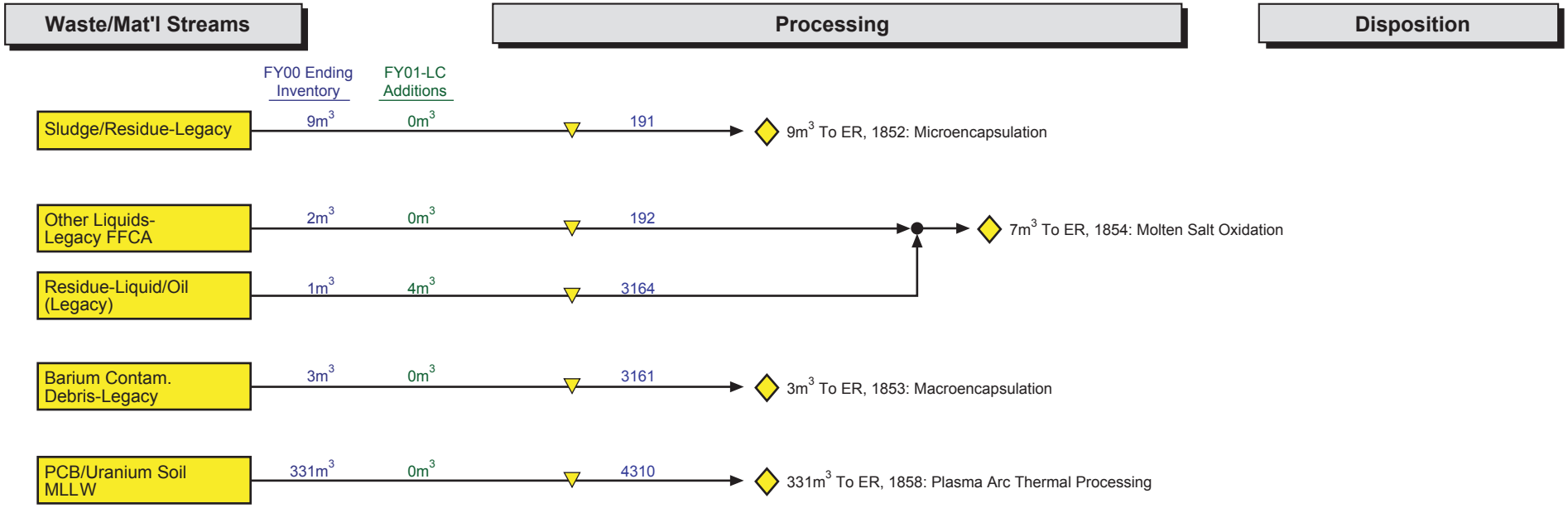

KEY: Albuquerque | Carlsbad | Chicago | Commercial | Idaho | Nevada | Oak Ridge | Oakland | Ohio | Richland | Rocky Flats | SRS | Other | Unknown | Off-site Interface: ▷ | On site Interface: ◇

● Maximum Programmatic Risk Score of 1 for a stream/TSD System

▼ Maximum Programmatic Risk Score of 2 or 3 for a stream/TSD System

⬢ Maximum Programmatic Risk Score of 4 or 5 for a stream/TSD System

○ No Programmatic Risk Score for a stream/TSD System

Rev. 6.0
10/5/01

Battelle Columbus ER Disposition Map

Dataset: IPABS-IS (8/28/01)

PREDECISIONAL DRAFT

This map is conceptual and in many cases does not represent cleanup or transfer decisions; this map does not preclude the on-going regulatory and stakeholder decision-making processes.

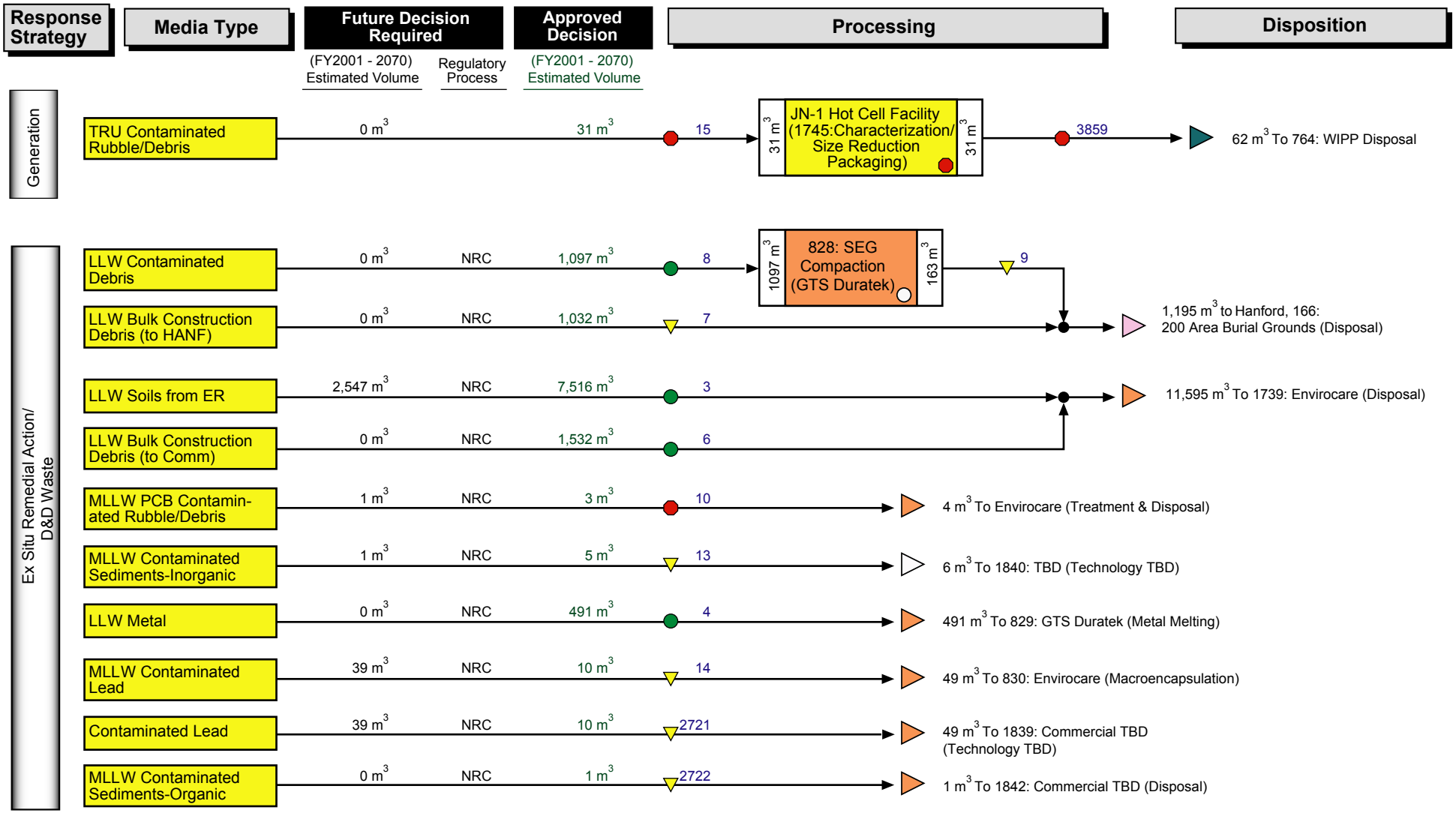

KEY: Albuquerque | Carlsbad | Chicago | Commercial | Idaho | Nevada | Oak Ridge | Oakland | Ohio | Richland | Rocky Flats | SRS | Other | Unknown | Off-site Interface: ▷ | On site Interface: ◇

● Maximum Programmatic Risk Score of 1 for a stream/TSD System

▼ Maximum Programmatic Risk Score of 2 or 3 for a stream/TSD System

● Maximum Programmatic Risk Score of 4 or 5 for a stream/TSD System

○ No Programmatic Risk Score for a stream/TSD System

Rev. 6.0
10/5/01

Fernald ER Disposition Map

Dataset: IPABS-IS (8/28/01)

PREDECISIONAL DRAFT

This map is conceptual and in many cases does not represent cleanup or transfer decisions; this map does not preclude the on-going regulatory and stakeholder decision-making processes.

Response Strategy	Media Type	Future Decision Required (FY2001 - 2070) Estimated Volume	Regulatory Process	Approved Decision (FY2001 - 2070) Estimated Volume	Processing	Disposition
Ex Situ Remedial Action/D&D Waste	LLW Sludges/Residues	160 m^3	RCRA/CERCLA	0 m^3	4288	58,414.2 m^3 To 461: NTS for Disposal at Area 3/Area 5 RWMS (Disposal)
	LLW Debris	190 m^3	RCRA/CERCLA	0 m^3	4289	
	Prohibited Items	39 m^3	RCRA/CERCLA	0 m^3	4292	
	LLW Asbestos	150 m^3	RCRA/CERCLA	0 m^3	4293	
	LLW Trash	50 m^3	RCRA/CERCLA	0 m^3	4295	
	Treated RCRA U Waste	12 m^3	RCRA/CERCLA	0 m^3	4298	
	LLW Trash Off Site	1,642 m^3	RCRA/CERCLA	0 m^3	4301	
	LLW Asbestos Off Site	240 m^3	RCRA/CERCLA	0 m^3	4306	
	LLW Residues	2,068 m^3	RCRA/CERCLA	0 m^3	4308	
	LLW Thorium Residues	0.2 m^3	RCRA/CERCLA	0 m^3	29965	
	LLW Trash	0 m^3		0 m^3	29969	
	LLW Debris	2,320 m^3	RCRA/CERCLA	0 m^3	29989	
	LLW Sludge	34 m^3	RCRA/CERCLA	0 m^3	29991	
	LLW Residues	25 m^3	RCRA/CERCLA	0 m^3	29992	
	LLW Asbestos	236 m^3	RCRA/CERCLA	0 m^3	29993	
	LLW Trash	691 m^3	RCRA/CERCLA	0 m^3	29995	
	LLW Filtercake	1,265 m^3	RCRA/CERCLA	0 m^3	30019	
	LLW Asbestos	280 m^3	RCRA/CERCLA	0 m^3	30028	
	LLW Debris	80 m^3	RCRA/CERCLA	0 m^3	30029	
	Thorium Metal	700 m^3	RCRA/CERCLA	0 m^3	30030	
	Uranium Metal	480 m^3	RCRA/CERCLA	0 m^3	30031	
	Prohibited Items	9,970 m^3	RCRA/CERCLA	0 m^3	30053	
	LLW Thorium	0 m^3		0 m^3	30082	

2

KEY: Albuquerque | Carlsbad | Chicago | Commercial | Idaho | Nevada | Oak Ridge | Oakland | Ohio | Richland | Rocky Flats | SRS | Other | Unknown | Off-site Interface: ▷ | On site Interface: ◇

● Maximum Programmatic Risk Score of 1 for a stream/TSD System

▼ Maximum Programmatic Risk Score of 2 or 3 for a stream/TSD System

● Maximum Programmatic Risk Score of 4 or 5 for a stream/TSD System

○ No Programmatic Risk Score for a stream/TSD System

Rev. 6.0
10/5/01

Fernald ER Disposition Map

Dataset: IPABS-IS (8/28/01)

PREDECISIONAL DRAFT

This map is conceptual and in many cases does not represent cleanup or transfer decisions; this map does not preclude the on-going regulatory and stakeholder decision-making processes.

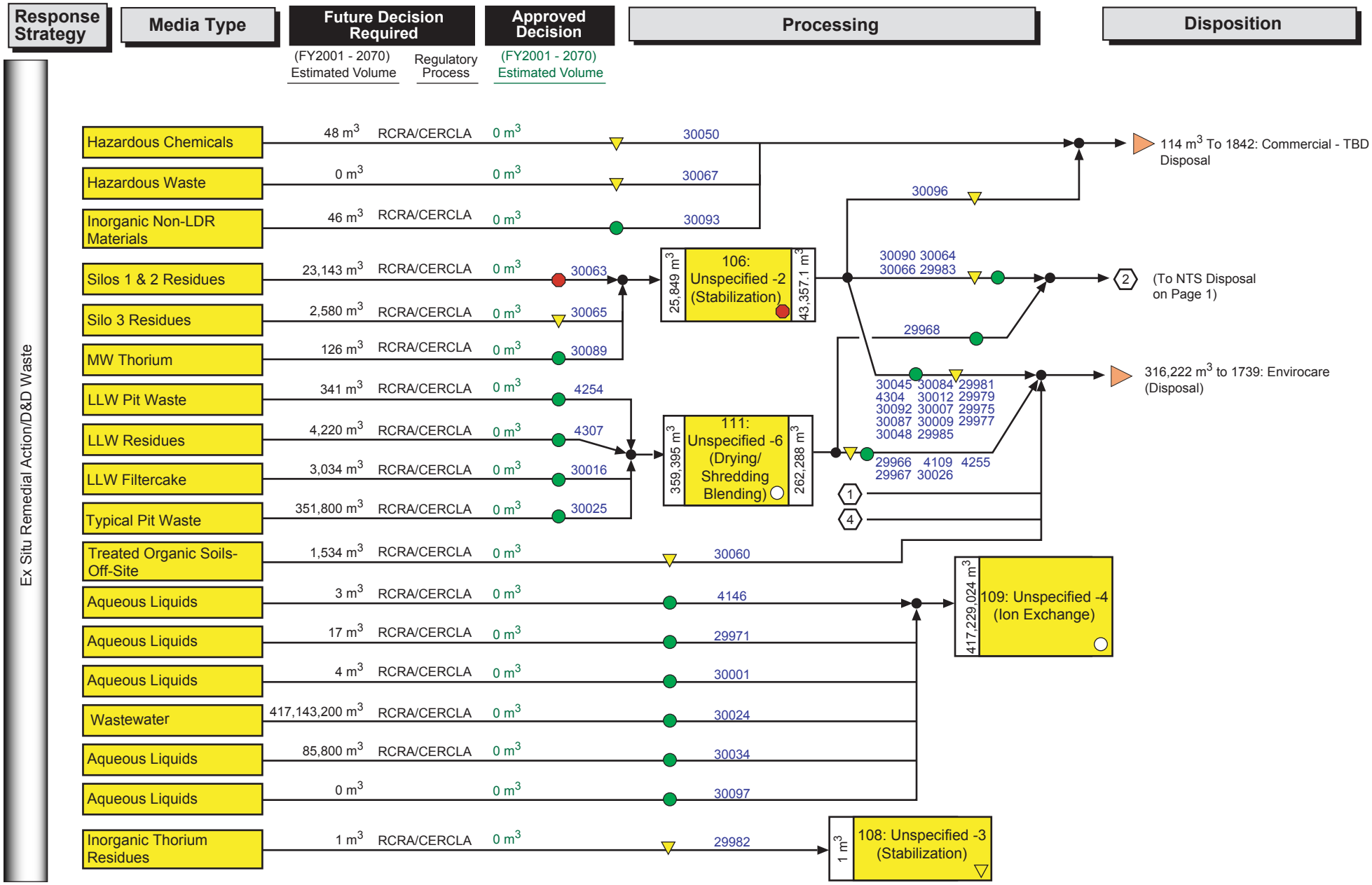

KEY: Albuquerque | Carlsbad | Chicago | Commercial | Idaho | Nevada | Oak Ridge | Oakland | Ohio | Richland | Rocky Flats | SRS | Other | Unknown | Off-site Interface: ▷ | On site Interface: ◇

● Maximum Programmatic Risk Score of 1 for a stream/TSD System

▼ Maximum Programmatic Risk Score of 2 or 3 for a stream/TSD System

● Maximum Programmatic Risk Score of 4 or 5 for a stream/TSD System

○ No Programmatic Risk Score for a stream/TSD System

Rev. 6.0
10/5/01

Fernald ER Disposition Map

Dataset: IPABS-IS (8/28/01)

PREDECISIONAL DRAFT

This map is conceptual and in many cases does not represent cleanup or transfer decisions; this map does not preclude the on-going regulatory and stakeholder decision-making processes.

Ex Situ Remedial Action/D&D Waste

Media Type	Future Decision Required (FY2001 - 2070) Estimated Volume	Regulatory Process	Approved Decision (FY2001 - 2070) Estimated Volume	Processing	Disposition
LLW Residues	277 m^3	CERCLA	0 m^3	4108	1 (To Envirocare Disposal on Page 2)
Treated Organic Sludges/Residues	24 m^3	RCRA/CERCLA	0 m^3	4148	
Treated Organic Debris	56 m^3	RCRA/CERCLA	0 m^3	4150	
Carbon/Filter Media	128 m^3	RCRA/CERCLA	0 m^3	4155	
Resin	140 m^3	RCRA/CERCLA	0 m^3	4156	
Treated LLW Soils	2,051 m^3	RCRA/CERCLA	0 m^3	4253	
LLW Soils	3,890 m^3	RCRA/CERCLA	0 m^3	4291	
Treated Inorganic Residues	60 m^3	RCRA/CERCLA	0 m^3	4296	
Treated Inorganic Debris	140 m^3	RCRA/CERCLA	0 m^3	4297	
LLW Soils	2,051 m^3	RCRA/CERCLA	0 m^3	4309	
Sewage Treatment Plant Soils	0 m^3		0 m^3	4331	
Treated Organic Residues	4 m^3	RCRA/CERCLA	0 m^3	29973	
Treated LLW Filtercake	2,186 m^3	RCRA/CERCLA	0 m^3	30017	
Carbon/Filter Media	360 m^3	RCRA/CERCLA	0 m^3	30020	
Resin	240 m^3	RCRA/CERCLA	0 m^3	30021	
Treated Organic Soils	1,160 m^3	RCRA/CERCLA	0 m^3	30036	
LLW Soil and Debris	33,710 m^3	RCRA/CERCLA	0 m^3	30052	

KEY: Albuquerque | Carlsbad | Chicago | Commercial | Idaho | Nevada | Oak Ridge | Oakland | Ohio | Richland | Rocky Flats | SRS | Other | Unknown | Off-site Interface: ▷ | On site Interface: ◇

● Maximum Programmatic Risk Score of 1 for a stream/TSD System

▼ Maximum Programmatic Risk Score of 2 or 3 for a stream/TSD System

● Maximum Programmatic Risk Score of 4 or 5 for a stream/TSD System

○ No Programmatic Risk Score for a stream/TSD System

Rev. 6.0
10/5/01

Fernald ER Disposition Map

Dataset: IPABS-IS (8/28/01)

PREDECISIONAL DRAFT

This map is conceptual and in many cases does not represent cleanup or transfer decisions; this map does not preclude the on-going regulatory and stakeholder decision-making processes.

Response Strategy	Media Type	Future Decision Required (FY2001 - 2070) Estimated Volume	Regulatory Process	Approved Decision (FY2001 - 2070) Estimated Volume	Processing	Disposition
Ex Situ Remedial Action/D&D Waste	Organic Liquids	3 m^3	RCRA/CERCLA	0 m^3	4145	5,040.8 m^3 To 1839: Commercial - TBD for Treatment (Technology TBD)
	Inorganic Residues	30 m^3	RCRA/CERCLA	0 m^3	4151	
	Inorganic Debris	70 m^3	RCRA/CERCLA	0 m^3	4153	
	Hazardous Waste	136 m^3	RCRA/CERCLA	0 m^3	4245	
	Inorganic Soils	19 m^3	RCRA/CERCLA	0 m^3	4302	
	Inorganic Residues	14 m^3	RCRA/CERCLA	0 m^3	29974	
	Inorganic Filtercake	14 m^3	RCRA/CERCLA	0 m^3	29976	
	Inorganic Sludge	24 m^3	RCRA/CERCLA	0 m^3	29978	
	Inorganic Debris	17 m^3	RCRA/CERCLA	0 m^3	29980	
	Lead	0.2 m^3	RCRA/CERCLA	0 m^3	29984	
	Lead	0.2 m^3	RCRA/CERCLA	0 m^3	29986	
	Organic Liquids	20 m^3	RCRA/CERCLA	0 m^3	30000	
	Inorganic Residue	3 m^3	RCRA/CERCLA	0 m^3	30006	
	Inorganic Debris	139 m^3	RCRA/CERCLA	0 m^3	30008	
	Lead	14 m^3	RCRA/CERCLA	0 m^3	30010	
	Lead	14 m^3	RCRA/CERCLA	0 m^3	30011	
	Organic Liquids	16 m^3	RCRA/CERCLA	0 m^3	30033	
	PCBs	167 m^3	RCRA/CERCLA	0 m^3	30083	
	Organic Debris	54 m^3	RCRA/CERCLA	0 m^3	30086	
	Inorganic Residues	140 m^3	RCRA/CERCLA	0 m^3	30091	
	RCRA Uranium Waste	6 m^3	RCRA/CERCLA	0 m^3	30098	

KEY: Albuquerque | Carlsbad | Chicago | Commercial | Idaho | Nevada | Oak Ridge | Oakland | Ohio | Richland | Rocky Flats | SRS | Other | Unknown | Off-site Interface: ▷ | On site Interface: ◇

● Maximum Programmatic Risk Score of 1 for a stream/TSD System

▼ Maximum Programmatic Risk Score of 2 or 3 for a stream/TSD System

● Maximum Programmatic Risk Score of 4 or 5 for a stream/TSD System

○ No Programmatic Risk Score for a stream/TSD System

Rev. 6.0
10/5/01

Fernald ER Disposition Map

Dataset: IPABS-IS (8/28/01)

PREDECISIONAL DRAFT

This map is conceptual and in many cases does not represent cleanup or transfer decisions; this map does not preclude the on-going regulatory and stakeholder decision-making processes.

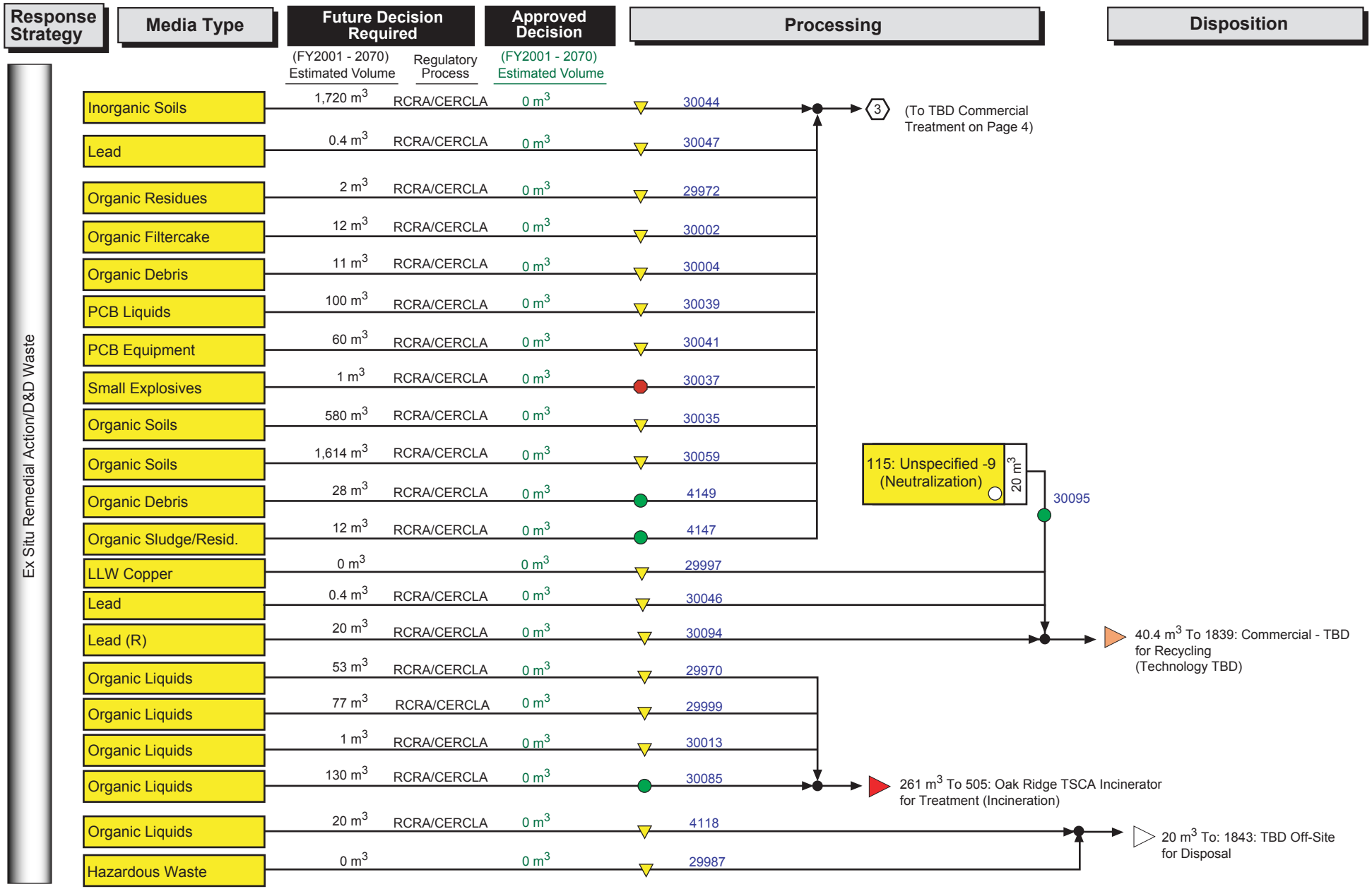

KEY: Albuquerque | Carlsbad | Chicago | Commercial | Idaho | Nevada | Oak Ridge | Oakland | Ohio | Richland | Rocky Flats | SRS | Other | Unknown | Off-site Interface: ▷ | On site Interface: ◇

● Maximum Programmatic Risk Score of 1 for a stream/TSD System

▼ Maximum Programmatic Risk Score of 2 or 3 for a stream/TSD System

● Maximum Programmatic Risk Score of 4 or 5 for a stream/TSD System

○ No Programmatic Risk Score for a stream/TSD System

Rev. 6.0
10/5/01

Fernald ER Disposition Map

Dataset: IPABS-IS (8/28/01)

PREDECISIONAL DRAFT

This map is conceptual and in many cases does not represent cleanup or transfer decisions; this map does not preclude the on-going regulatory and stakeholder decision-making processes.

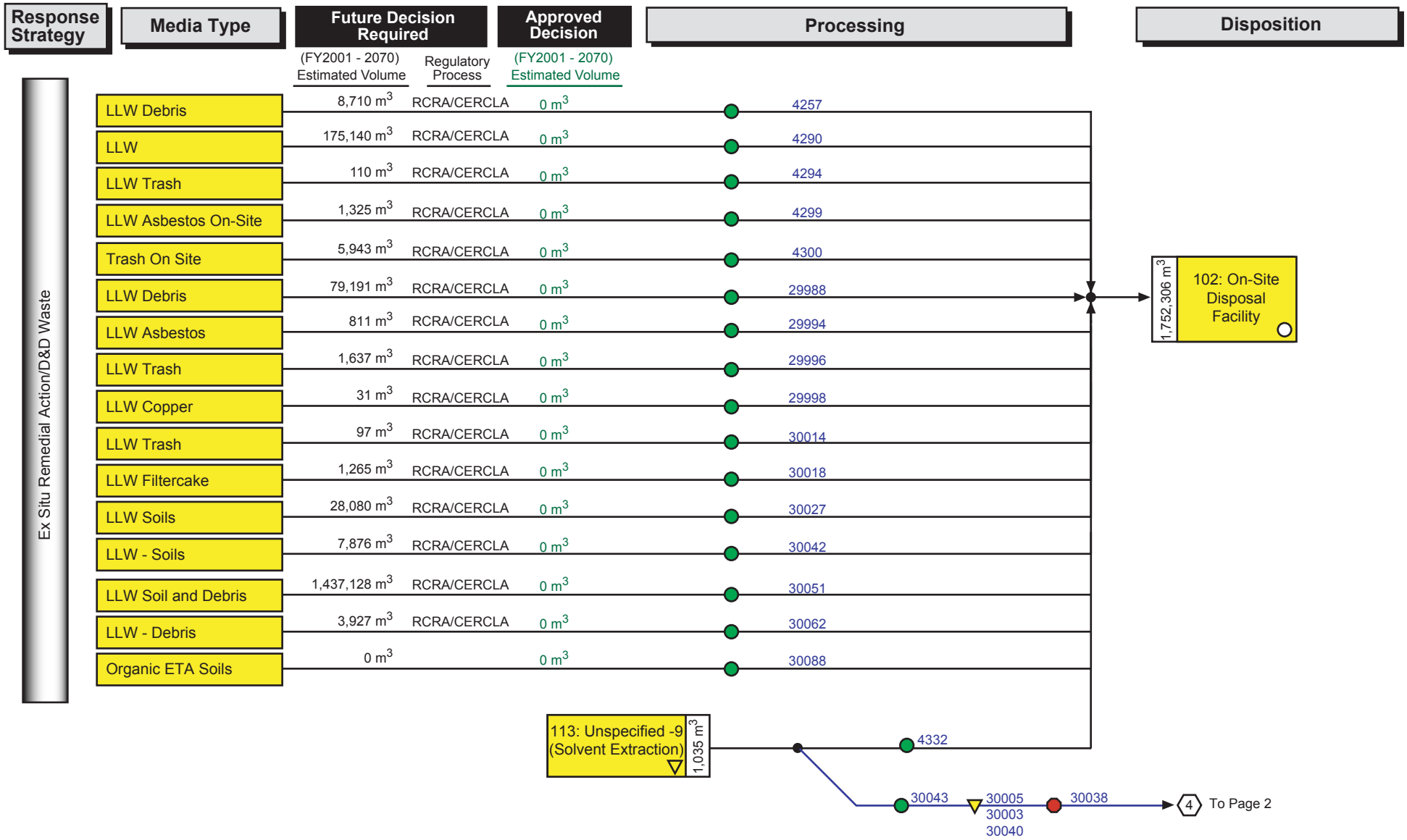

KEY: Albuquerque | Carlsbad | Chicago | Commercial | Idaho | Nevada | Oak Ridge | Oakland | Ohio | Richland | Rocky Flats | SRS | Other | Unknown | Off-site Interface: ▷ | On site Interface: ◇

● Maximum Programmatic Risk Score of 1 for a stream/TSD System

▼ Maximum Programmatic Risk Score of 2 or 3 for a stream/TSD System

⬢ Maximum Programmatic Risk Score of 4 or 5 for a stream/TSD System

○ No Programmatic Risk Score for a stream/TSD System

Rev. 6.0
10/5/01

Miamisburg ER Disposition Map

Dataset: IPABS-IS (8/28/01)

PREDECISIONAL DRAFT

This map is conceptual and in many cases does not represent cleanup or transfer decisions; this map does not preclude the on-going regulatory and stakeholder decision-making processes.

Response Strategy	Media Type	Future Decision Required (FY2001 - 2070) Estimated Volume	Regulatory Process	Approved Decision (FY2001 - 2070) Estimated Volume	Processing	Disposition
Ex Situ Remedial Action/ D&D Waste	Legacy Soil Boxes	0 m^3	CERCLA	3390 m^3	114	87,175 m^3 To 1739: Envirocare (Disposal)
	Legacy Soil Boxes	0 m^3		0 m^3	3651	
	Main Hill Rad Facilities Soils	0 m^3		0 m^3	130	
	SM/PP Hill Facilities Soils	0 m^3		0 m^3	132	
	SM/PP Hill Facilities Debris	0 m^3		0 m^3	133	
	Test Fire Facilities Soils	0 m^3		0 m^3	134	
	Test Fire Facilities Debris	0 m^3		0 m^3	135	
	Sewage Plant Sludge Disposal	45 m^3	CERCLA	317 m^3	143	
	Soils Project Soils	0 m^3		0 m^3	136	
	Mound Soils	65,827 m^3	CERCLA	0 m^3	4120	
	Mound Low Debris	17,596 m^3	CERCLA	0 m^3	4121	
	Legacy Lab Trash +	0 m^3		0 m^3	115	39,524 m^3 To NTS, 461: Area3/Area5 RWMS (Disposal)
	Main Hill Tritium Debris	0 m^3		0 m^3	129	
	Main Hill Rad Facilities Debris	0 m^3		0 m^3	131	
	Mound Moderate Debris	39,524 m^3	CERCLA	0 m^3	4122	

KEY: Albuquerque | Carlsbad | Chicago | Commercial | Idaho | Nevada | Oak Ridge | Oakland | Ohio | Richland | Rocky Flats | SRS | Other | Unknown | Off-site Interface: ▷ | On site Interface: ◇

● Maximum Programmatic Risk Score of 1 for a stream/TSD System

▼ Maximum Programmatic Risk Score of 2 or 3 for a stream/TSD System

● Maximum Programmatic Risk Score of 4 or 5 for a stream/TSD System

○ No Programmatic Risk Score for a stream/TSD System

Rev. 6.0
10/5/01

Miamisburg ER Disposition Map

Dataset: IPABS-IS (8/28/01)

PREDECISIONAL DRAFT

This map is conceptual and in many cases does not represent cleanup or transfer decisions; this map does not preclude the on-going regulatory and stakeholder decision-making processes.

Response Strategy	Media Type	Future Decision Required (FY2001 - 2070) Estimated Volume	Regulatory Process	Approved Decision (FY2001 - 2070) Estimated Volume	Processing	Disposition
Ex Situ Remedial Action/ D&D Waste	Main Hill Tritium San. Debris	0 m^3		0 m^3	137	31,334m^3 To 1842: TBD Commercial (Disposal)
	Main Hill Rad Fac. San. Debris	0 m^3		0 m^3	138	
	Main Hill Non-Rad San. Debris	0 m^3		0 m^3	139	
	SM/PP Hill Fac. San. Debris	0 m^3		0 m^3	140	
	Test Fire Facilities San. Debris	0 m^3		0 m^3	141	
	Soils Project Sanitary Soils	0 m^3		0 m^3	142	
	Main Hill Tritium Haz. Mtl.	0 m^3		0 m^3	144	
	Main Hill Rad Fac. Haz. Mtl.	0 m^3		0 m^3	145	
	Main Hill Non-Rad Haz. Mtl.	0 m^3		0 m^3	146	
	SM/PP Hill Fac. Haz. Mtl.	0 m^3		0 m^3	147	
	Test Fire Facilities Haz. Mtl.	0 m^3		0 m^3	148	
	Mound Sanitary Debris	26,173 m^3		0 m^3	4124	
	Mound Hazardous Material	5,161 m^3	RCRA/CERCLA	0 m^3	4125	

KEY: Albuquerque | Carlsbad | Chicago | Commercial | Idaho | Nevada | Oak Ridge | Oakland | Ohio | Richland | Rocky Flats | SRS | Other | Unknown | Off-site Interface: ▷ | On site Interface: ◇

● Maximum Programmatic Risk Score of 1 for a stream/TSD System

▼ Maximum Programmatic Risk Score of 2 or 3 for a stream/TSD System

● Maximum Programmatic Risk Score of 4 or 5 for a stream/TSD System

○ No Programmatic Risk Score for a stream/TSD System

Rev. 6.0
10/5/01

Dataset: IPABS-IS (8/28/01)

Miamisburg (Mound) MLLW Disposition Map

PREDECISIONAL DRAFT

This map is conceptual and in many cases does not represent cleanup or transfer decisions; this map does not preclude the on-going regulatory and stakeholder decision-making processes.

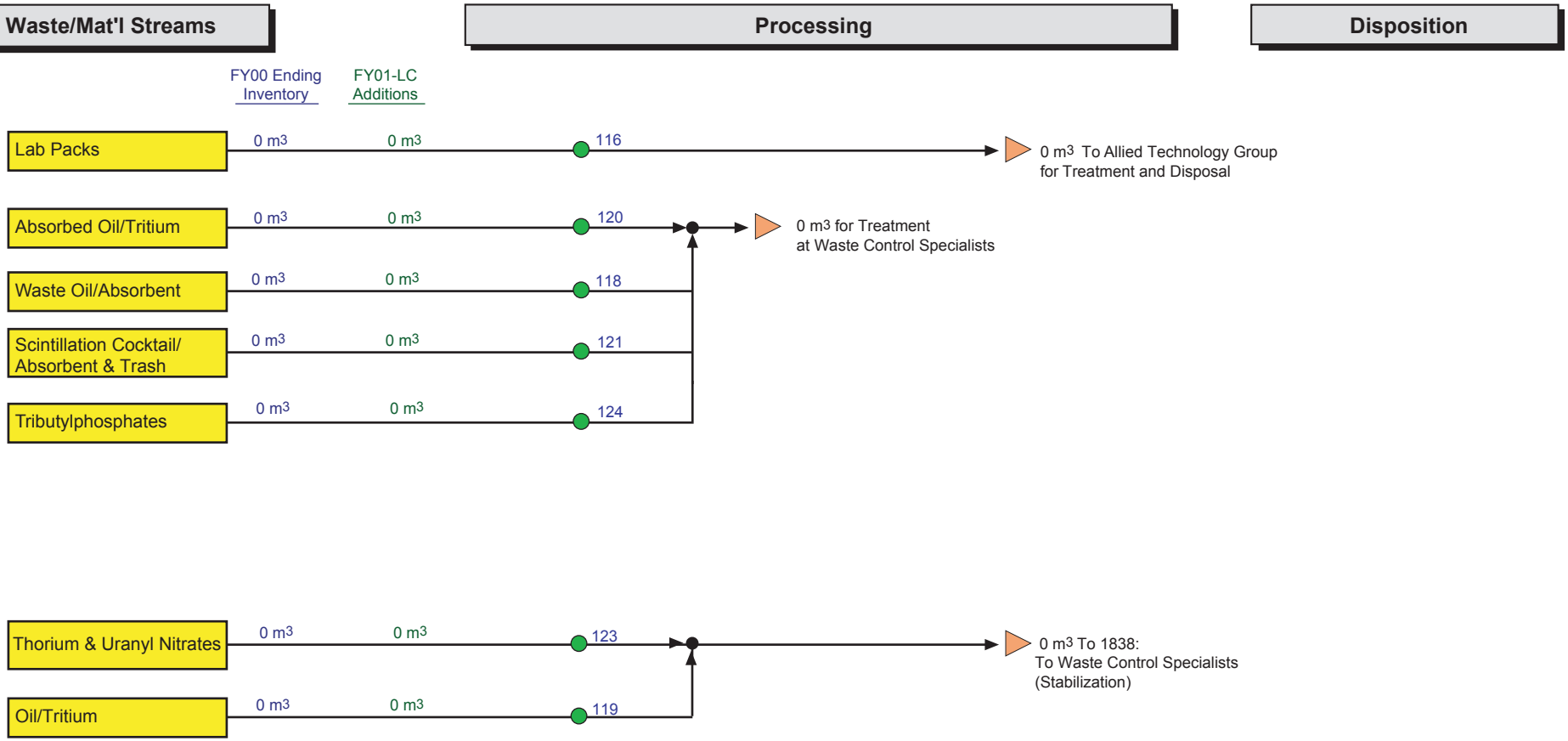

KEY: Albuquerque | Carlsbad | Chicago | Commercial | Idaho | Nevada | Oak Ridge | Oakland | Ohio | Richland | Rocky Flats | SRS | Other | Unknown | Off-site Interface: ▷ | On site Interface: ◇

● Maximum Programmatic Risk Score of 1 for a stream/TSD System

▼ Maximum Programmatic Risk Score of 2 or 3 for a stream/TSD System

● Maximum Programmatic Risk Score of 4 or 5 for a stream/TSD System

○ No Programmatic Risk Score for a stream/TSD System

Rev. 6.0
10/5/01

Dataset: IPABS-IS (8/28/01)

PREDECISIONAL DRAFT

This map is conceptual and in many cases does not represent cleanup or transfer decisions; this map does not preclude the on-going regulatory and stakeholder decision-making processes.

Miamisburg (Mound) TRU Disposition Map

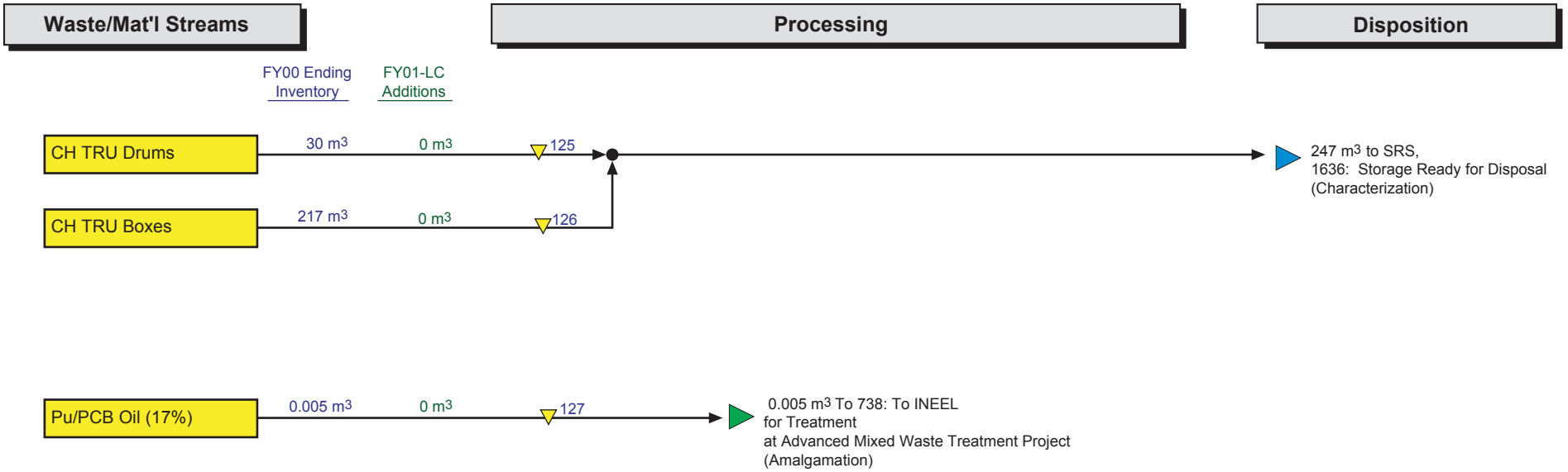

KEY: Albuquerque | Carlsbad | Chicago | Commercial | Idaho | Nevada | Oak Ridge | Oakland | Ohio | Richland | Rocky Flats | SRS | Other | Unknown | Off-site Interface: ▷ | On site Interface: ◇

● Maximum Programmatic Risk Score of 1 for a stream/TSD System

▼ Maximum Programmatic Risk Score of 2 or 3 for a stream/TSD System

● Maximum Programmatic Risk Score of 4 or 5 for a stream/TSD System

○ No Programmatic Risk Score for a stream/TSD System

Rev. 6.0
10/5/01

West Valley HLW Disposition Map

Dataset: IPABS-IS (8/28/01)

PREDECISIONAL DRAFT

This map is conceptual and in many cases does not represent cleanup or transfer decisions; this map does not preclude the on-going regulatory and stakeholder decision-making processes.

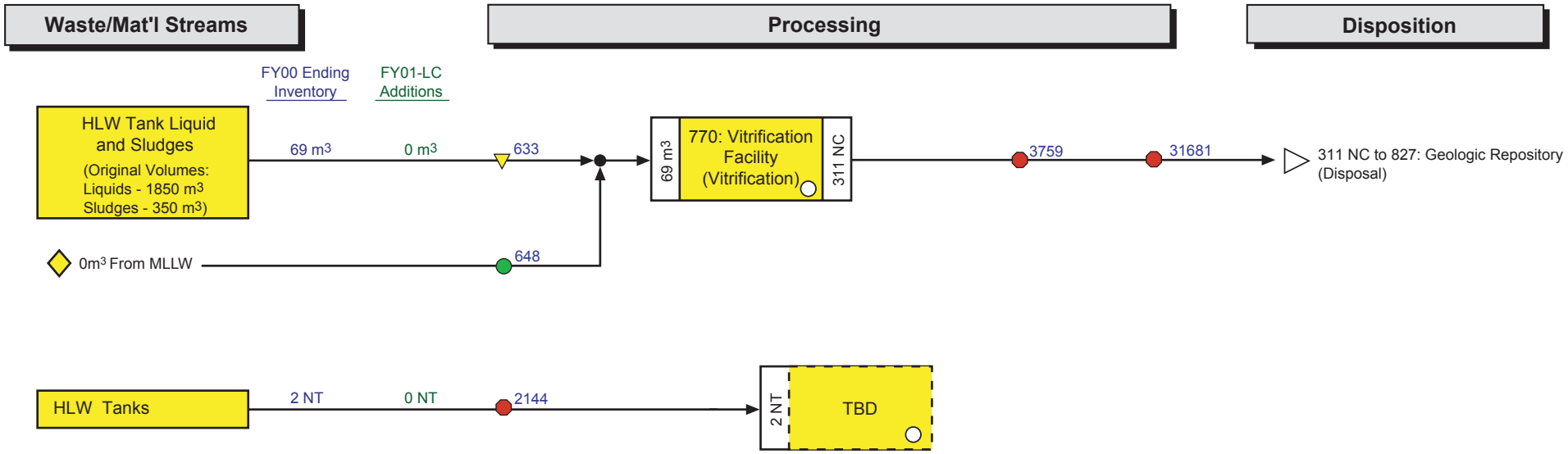

KEY: Albuquerque | Carlsbad | Chicago | Commercial | Idaho | Nevada | Oak Ridge | Oakland | Ohio | Richland | Rocky Flats | SRS | Other | Unknown | Off-site Interface: ▷ | On site Interface: ◇

● Maximum Programmatic Risk Score of 1 for a stream/TSD System

▼ Maximum Programmatic Risk Score of 2 or 3 for a stream/TSD System

● Maximum Programmatic Risk Score of 4 or 5 for a stream/TSD System

○ No Programmatic Risk Score for a stream/TSD System

Rev. 6.0
10/5/01

Dataset: IPABS-IS (8/28/01)

West Valley LLW Disposition Map

PREDECISIONAL DRAFT

This map is conceptual and in many cases does not represent cleanup or transfer decisions; this map does not preclude the on-going regulatory and stakeholder decision-making processes.

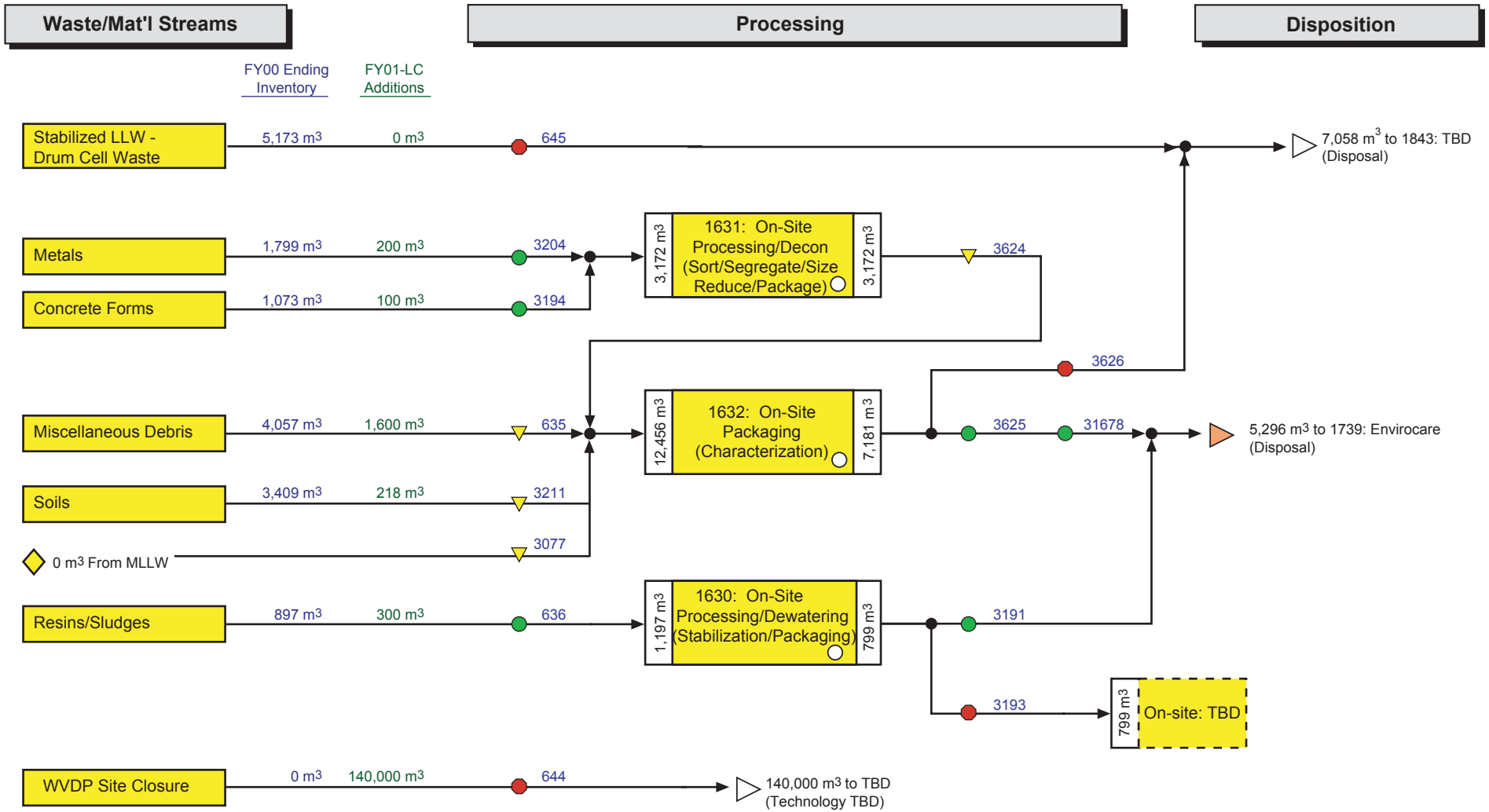

KEY: Albuquerque | Carlsbad | Chicago | Commercial | Idaho | Nevada | Oak Ridge | Oakland | Ohio | Richland | Rocky Flats | SRS | Other | Unknown | Off-site Interface: ▷ | On site Interface: ◇

● Maximum Programmatic Risk Score of 1 for a stream/TSD System

▼ Maximum Programmatic Risk Score of 2 or 3 for a stream/TSD System

⬢ Maximum Programmatic Risk Score of 4 or 5 for a stream/TSD System

○ No Programmatic Risk Score for a stream/TSD System

Rev. 6.0
10/5/01

Dataset: IPABS-IS (8/28/01)

PREDECISIONAL DRAFT

This map is conceptual and in many cases does not represent cleanup or transfer decisions; this map does not preclude the on-going regulatory and stakeholder decision-making processes.

West Valley MLLW Disposition Map

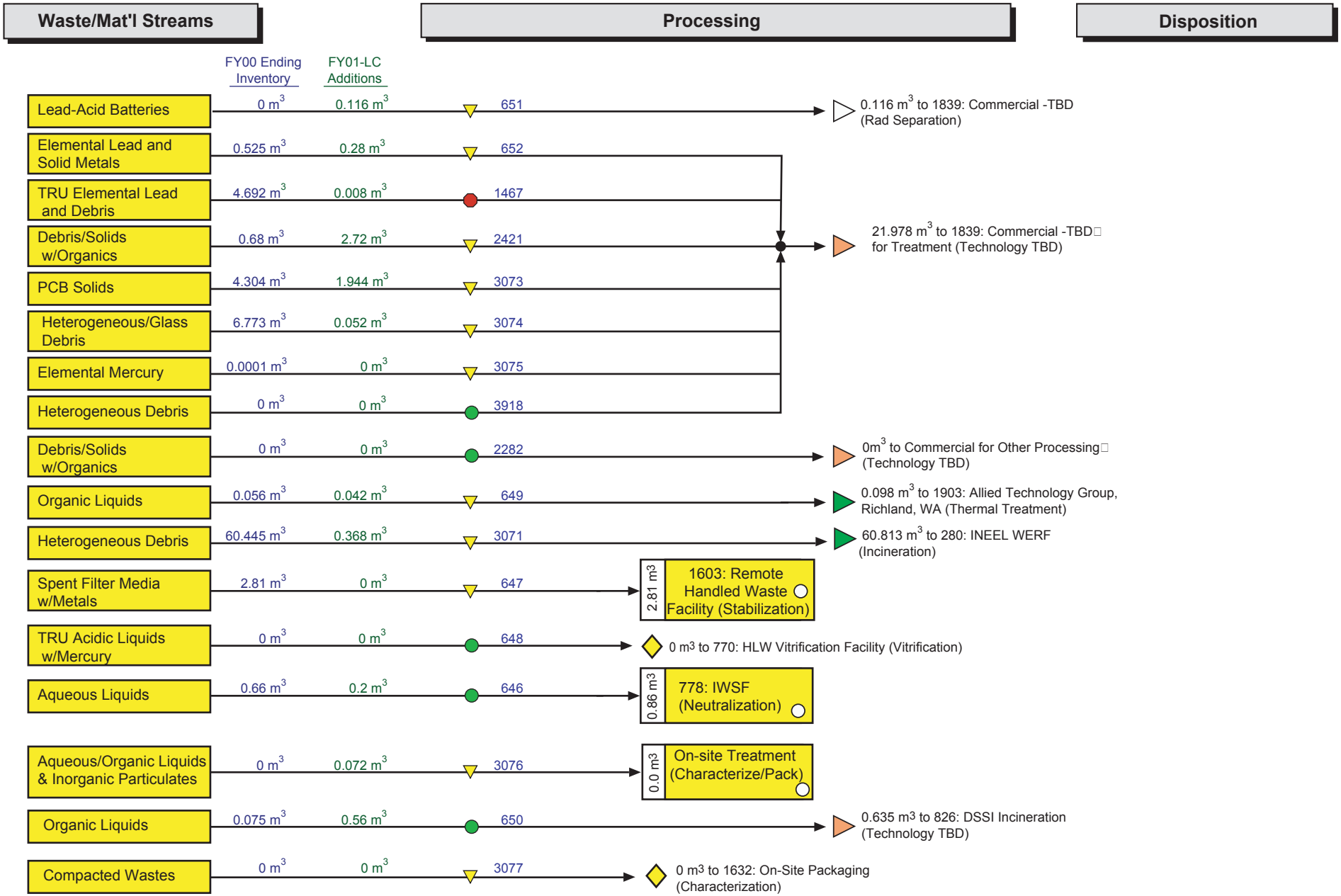

Dataset: IPABS-IS (8/28/01)

PREDECISIONAL DRAFT

This map is conceptual and in many cases does not represent cleanup or transfer decisions; this map does not preclude the on-going regulatory and stakeholder decision-making processes.

West Valley SNF Disposition Map

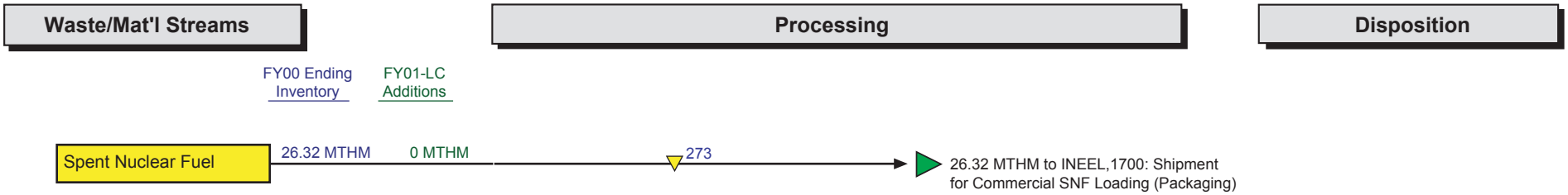

KEY: Albuquerque | Carlsbad | Chicago | Commercial | Idaho | Nevada | Oak Ridge | Oakland | Ohio | Richland | Rocky Flats | SRS | Other | Unknown | Off-site Interface: ▷ | On site Interface: ◇

● Maximum Programmatic Risk Score of 1 for a stream/TSD System

▼ Maximum Programmatic Risk Score of 2 or 3 for a stream/TSD System

● Maximum Programmatic Risk Score of 4 or 5 for a stream/TSD System

○ No Programmatic Risk Score for a stream/TSD System

Rev. 6.0
10/5/01

Dataset: IPABS-IS (8/28/01)

PREDECISIONAL DRAFT

This map is conceptual and in many cases does not represent cleanup or transfer decisions; this map does not preclude the on-going regulatory and stakeholder decision-making processes.

West Valley TRU Disposition Map

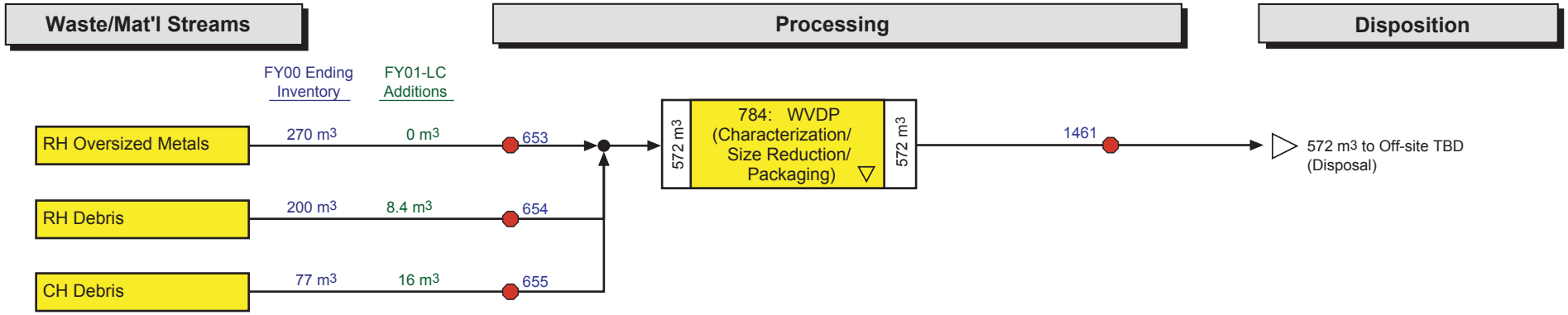

KEY: Albuquerque | Carlsbad | Chicago | Commercial | Idaho | Nevada | Oak Ridge | Oakland | Ohio | Richland | Rocky Flats | SRS | Other | Unknown | Off-site Interface: ▷ | On site Interface: ◇

● Maximum Programmatic Risk Score of 1 for a stream/TSD System

▼ Maximum Programmatic Risk Score of 2 or 3 for a stream/TSD System

● Maximum Programmatic Risk Score of 4 or 5 for a stream/TSD System

○ No Programmatic Risk Score for a stream/TSD System

Rev. 6.0
10/5/01