Oak Ridge ER Disposition Map

Dataset: IPABS-IS (9/27/01)

PREDECISIONAL DRAFT

This map is conceptual and in many cases does not represent cleanup or transfer decisions; this map does not preclude the on-going regulatory and stakeholder decision-making processes.

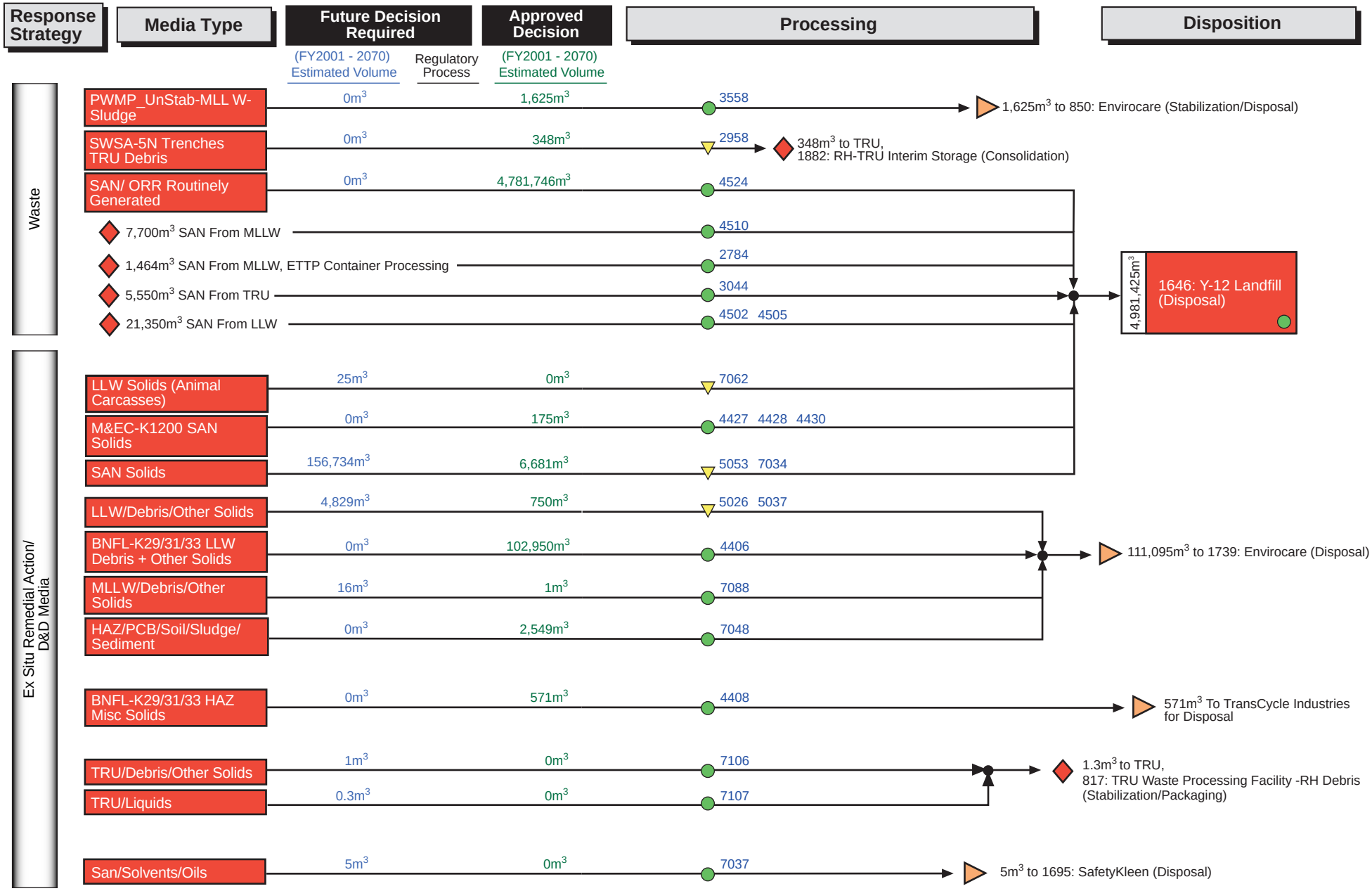

KEY: Albuquerque | Carlsbad | Chicago | Commercial | Idaho | Nevada | Oak Ridge | Oakland | Ohio | Richland | Rocky Flats | SRS | Other | Unknown | Off-site Interface: ▷ | On site Interface: ◇

● Maximum Programmatic Risk Score of 1 for a stream/TSD System

▼ Maximum Programmatic Risk Score of 2 or 3 for a stream/TSD System

⬢ Maximum Programmatic Risk Score of 4 or 5 for a stream/TSD System

○ No Programmatic Risk Score for a stream/TSD System

Rev. 6.1
12/6/01

Oak Ridge ER Disposition Map

Dataset: IPABS-IS (9/27/01)

PREDECISIONAL DRAFT

This map is conceptual and in many cases does not represent cleanup or transfer decisions; this map does not preclude the on-going regulatory and stakeholder decision-making processes.

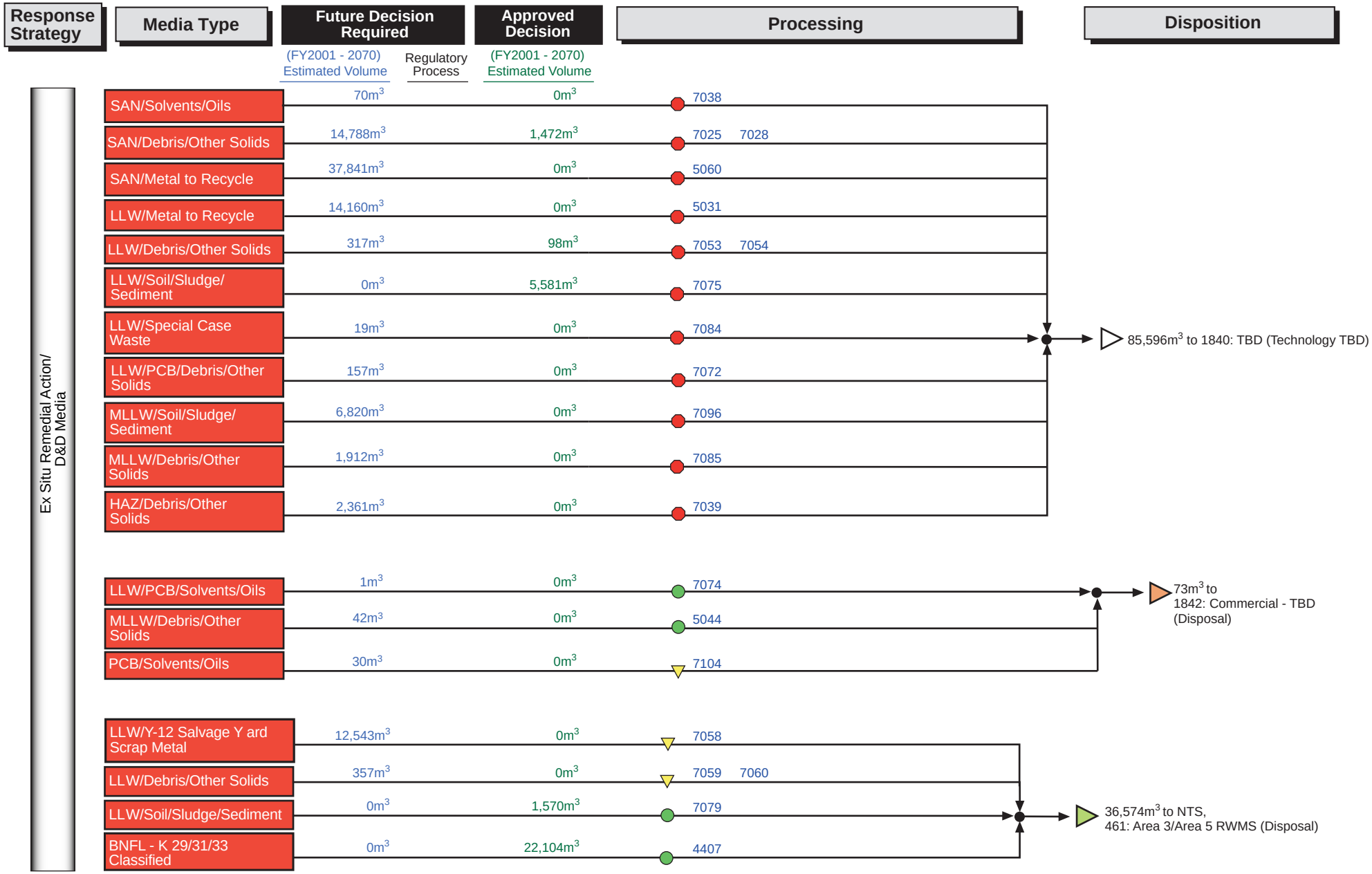

KEY: Albuquerque | Carlsbad | Chicago | Commercial | Idaho | Nevada | Oak Ridge | Oakland | Ohio | Richland | Rocky Flats | SRS | Other | Unknown | Off-site Interface: ▷ | On site Interface: ◇

● Maximum Programmatic Risk Score of 1 for a stream/TSD System

▼ Maximum Programmatic Risk Score of 2 or 3 for a stream/TSD System

● Maximum Programmatic Risk Score of 4 or 5 for a stream/TSD System

○ No Programmatic Risk Score for a stream/TSD System

Rev. 6.1
12/6/01

Oak Ridge ER Disposition Map

Dataset: IPABS-IS (9/27/01)

PREDECISIONAL DRAFT

This map is conceptual and in many cases does not represent cleanup or transfer decisions; this map does not preclude the on-going regulatory and stakeholder decision-making processes.

Oak Ridge ER Disposition Map

Dataset: IPABS-IS (9/27/01)

PREDECISIONAL DRAFT

This map is conceptual and in many cases does not represent cleanup or transfer decisions; this map does not preclude the on-going regulatory and stakeholder decision-making processes.

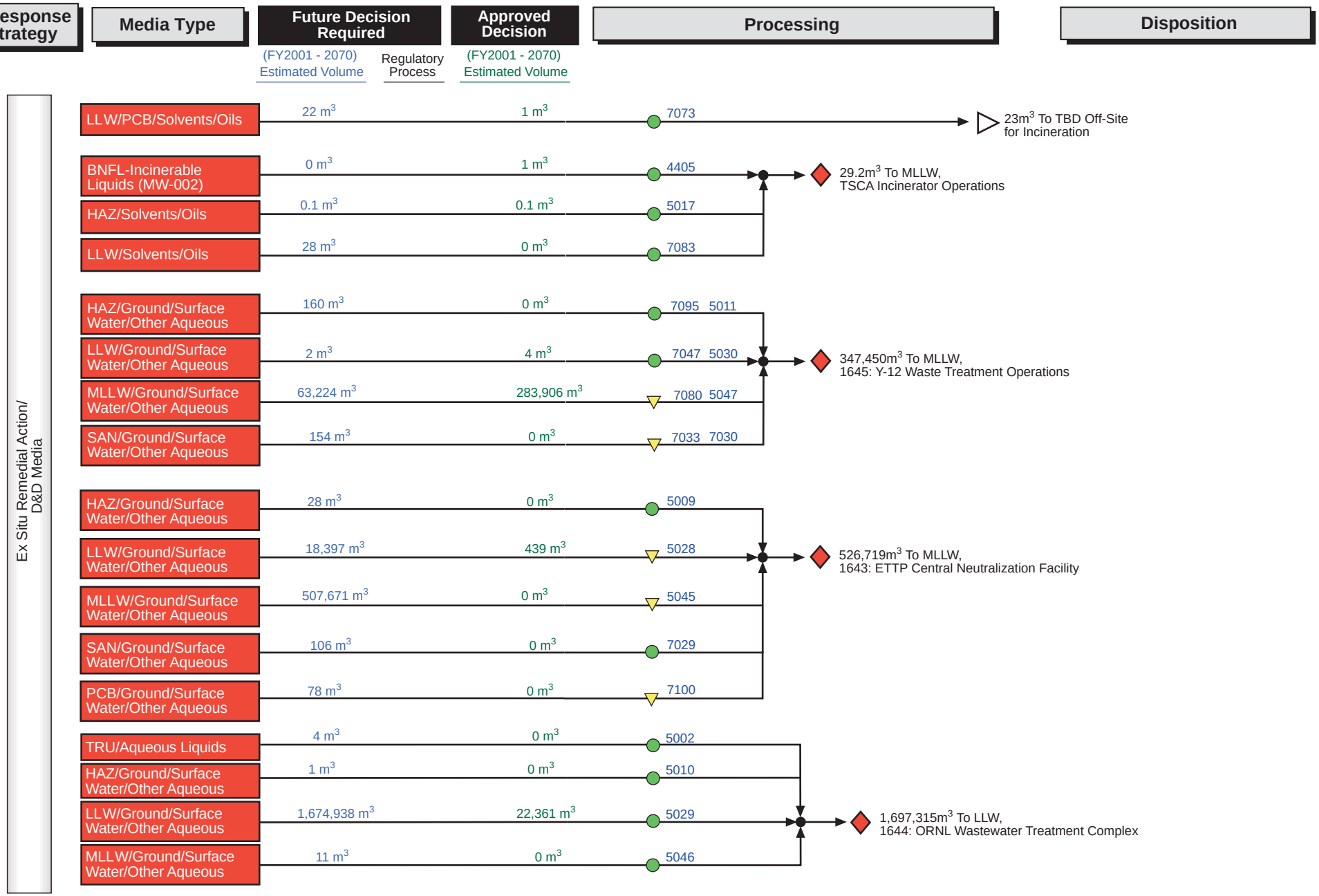

KEY: Albuquerque | Carlsbad | Chicago | Commercial | Idaho | Nevada | Oak Ridge | Oakland | Ohio | Richland | Rocky Flats | SRS | Other | Unknown | Off-site Interface: ▷ | On site Interface: ◇

● Maximum Programmatic Risk Score of 1 for a stream/TSD System

▼ Maximum Programmatic Risk Score of 2 or 3 for a stream/TSD System

● Maximum Programmatic Risk Score of 4 or 5 for a stream/TSD System

○ No Programmatic Risk Score for a stream/TSD System

Rev. 6.1
12/6/01

Oak Ridge ER Disposition Map

Dataset: IPABS-IS (9/27/01)

PREDECISIONAL DRAFT

This map is conceptual and in many cases does not represent cleanup or transfer decisions; this map does not preclude the on-going regulatory and stakeholder decision-making processes.

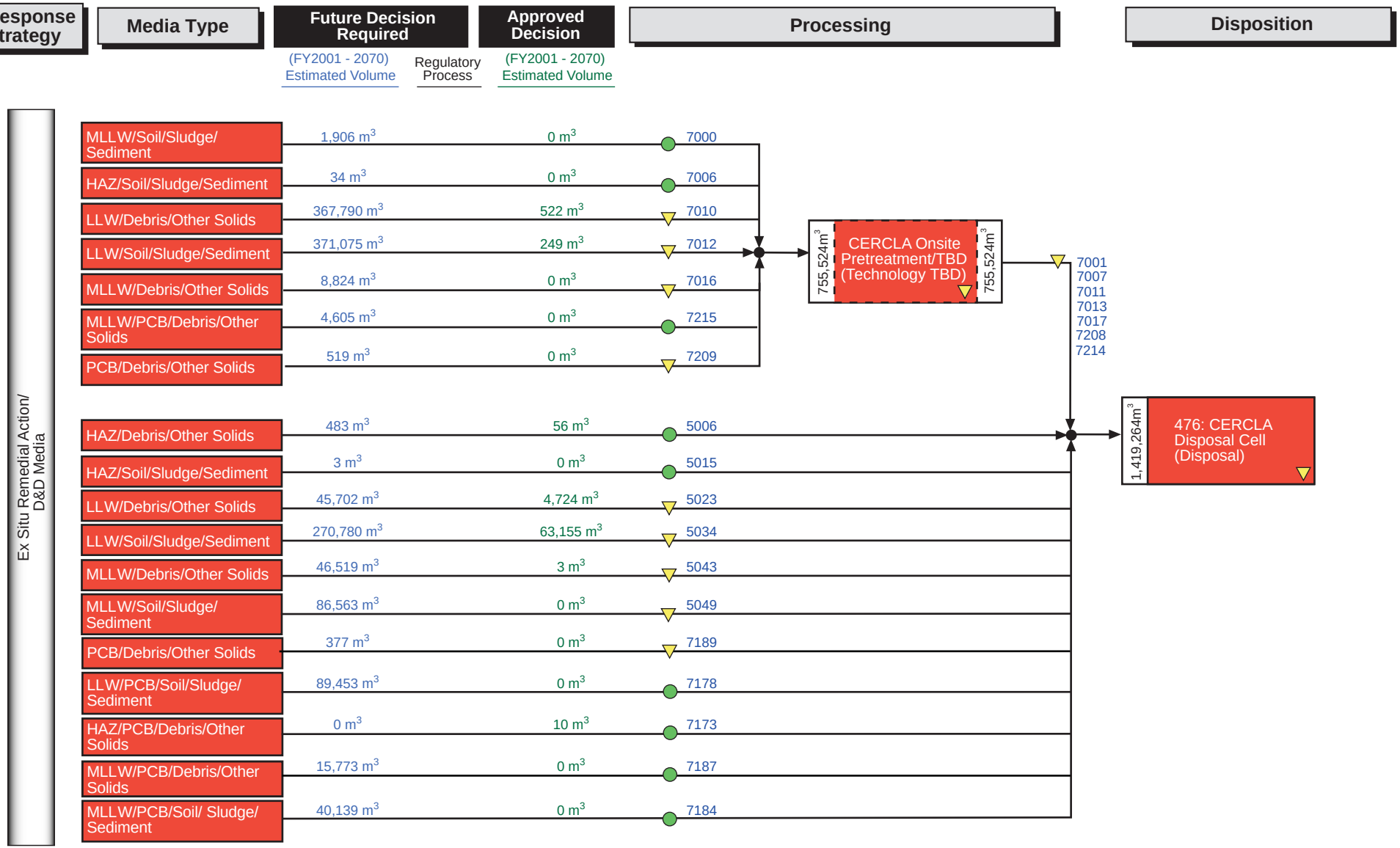

KEY: Albuquerque | Carlsbad | Chicago | Commercial | Idaho | Nevada | Oak Ridge | Oakland | Ohio | Richland | Rocky Flats | SRS | Other | Unknown | Off-site Interface: ▷ | On site Interface: ◇

● Maximum Programmatic Risk Score of 1 for a stream/TSD System

▼ Maximum Programmatic Risk Score of 2 or 3 for a stream/TSD System

● Maximum Programmatic Risk Score of 4 or 5 for a stream/TSD System

○ No Programmatic Risk Score for a stream/TSD System

Rev. 6.1
12/6/01

Oak Ridge ER Disposition Map

Dataset: IPABS-IS (9/27/01)

PREDECISIONAL DRAFT

This map is conceptual and in many cases does not represent cleanup or transfer decisions; this map does not preclude the on-going regulatory and stakeholder decision-making processes.

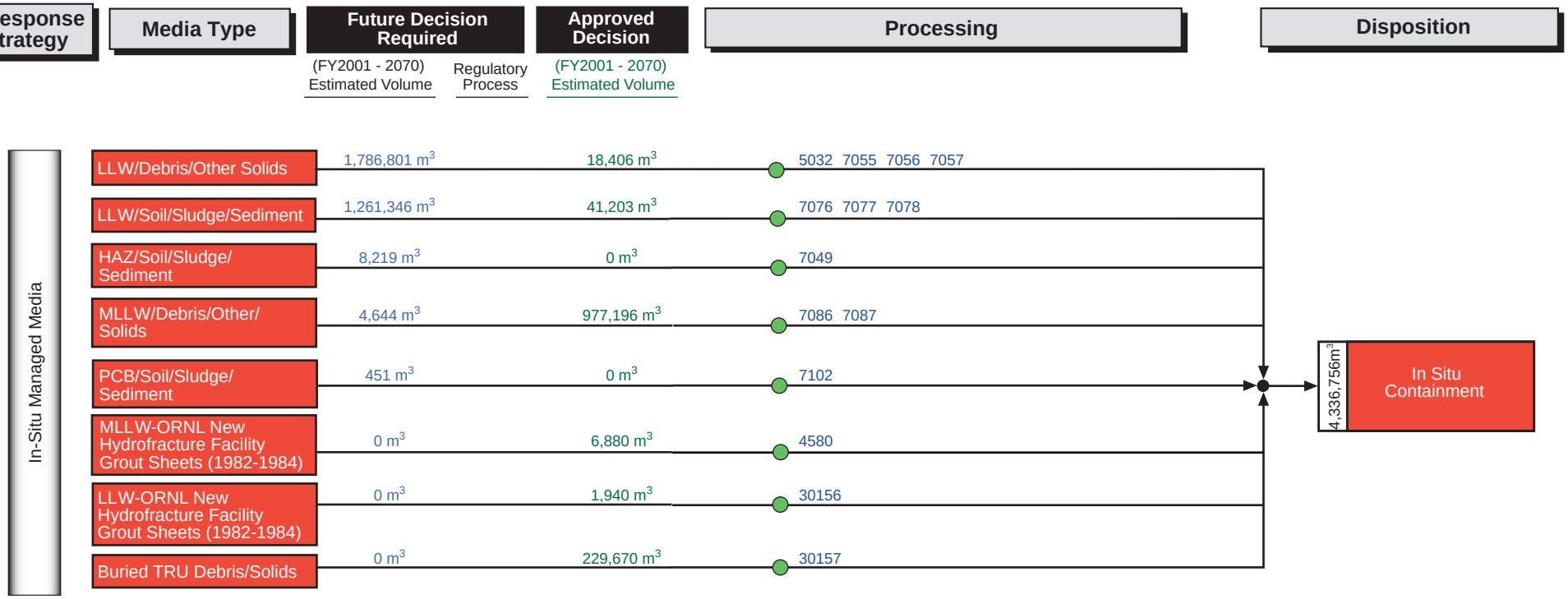

KEY: Albuquerque | Carlsbad | Chicago | Commercial | Idaho | Nevada | Oak Ridge | Oakland | Ohio | Richland | Rocky Flats | SRS | Other | Unknown | Off-site Interface: ▷ | On site Interface: ◇

● Maximum Programmatic Risk Score of 1 for a stream/TSD System

▼ Maximum Programmatic Risk Score of 2 or 3 for a stream/TSD System

● Maximum Programmatic Risk Score of 4 or 5 for a stream/TSD System

○ No Programmatic Risk Score for a stream/TSD System

Rev. 6.1
12/6/01

Oak Ridge HAZ Disposition Map

Dataset: IPABS-IS (9/27/01)

PREDECISIONAL DRAFT

This map is conceptual and in many cases does not represent cleanup or transfer decisions; this map does not preclude the on-going regulatory and stakeholder decision-making processes.

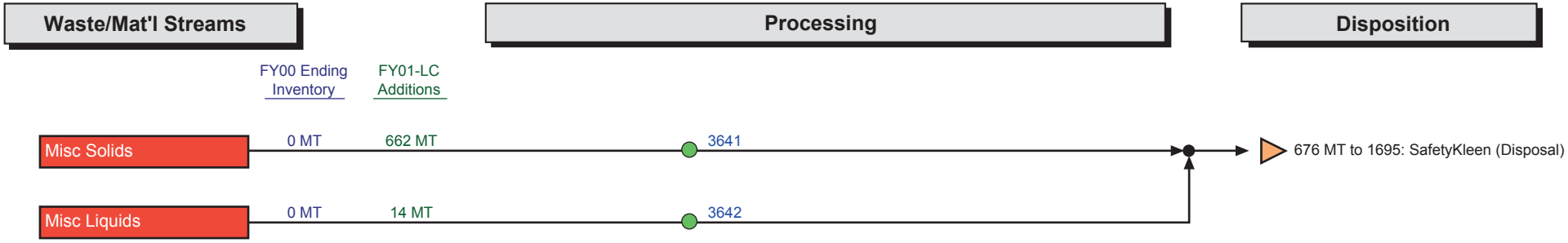

KEY: Albuquerque | Carlsbad | Chicago | Commercial | Idaho | Nevada | Oak Ridge | Oakland | Ohio | Richland | Rocky Flats | SRS | Other | Unknown | Off-site Interface: ▷ | On site Interface: ◇

● Maximum Programmatic Risk Score of 1 for a stream/TSD System

▼ Maximum Programmatic Risk Score of 2 or 3 for a stream/TSD System

⬢ Maximum Programmatic Risk Score of 4 or 5 for a stream/TSD System

○ No Programmatic Risk Score for a stream/TSD System

Rev. 6.1
12/6/01

Dataset: IPABS-IS (9/27/01)

PREDECISIONAL DRAFT

This map is conceptual and in many cases does not represent cleanup or transfer decisions; this map does not preclude the on-going regulatory and stakeholder decision-making processes.

Oak Ridge LLW Disposition Map

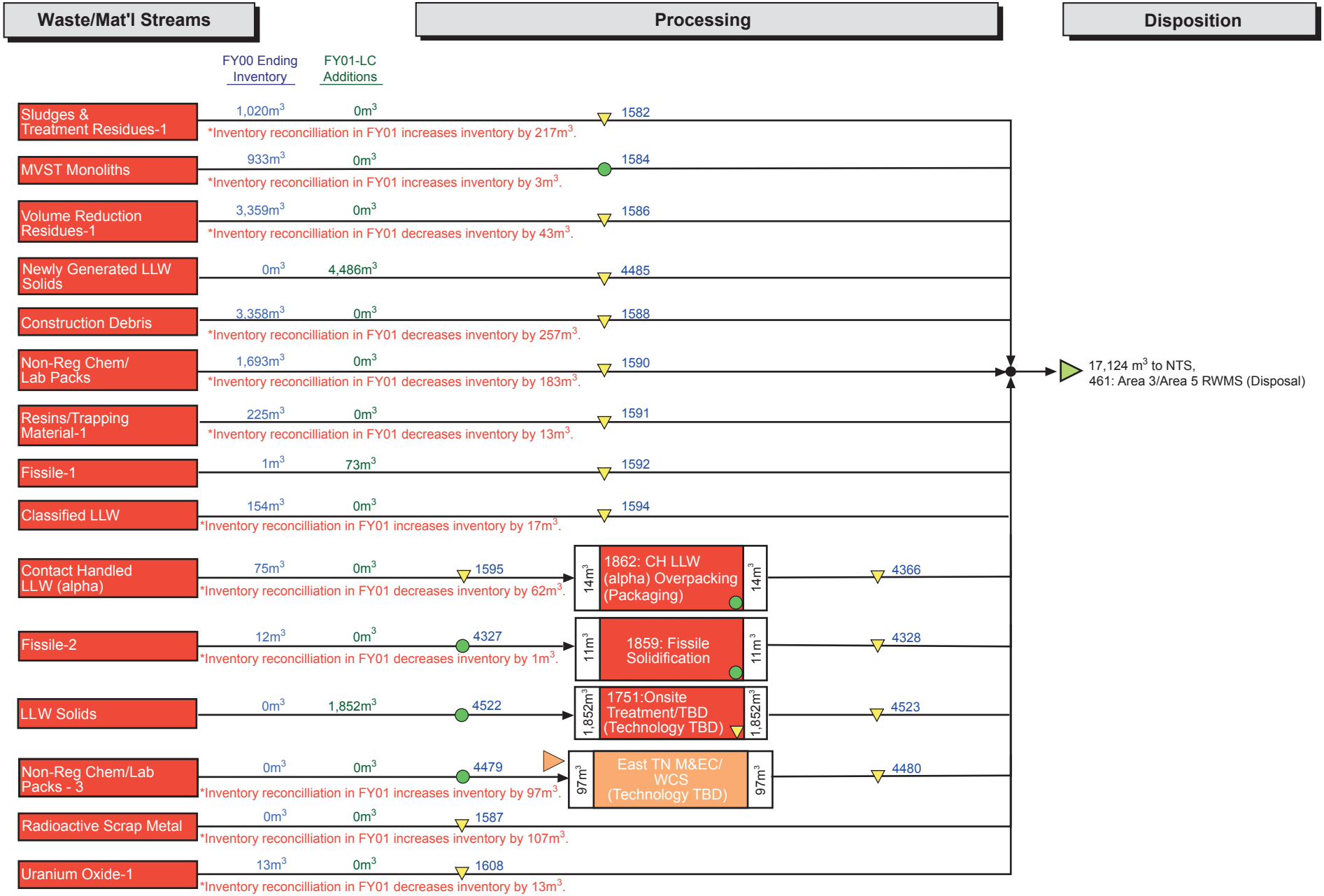

KEY: Albuquerque | Carlsbad | Chicago | Commercial | Idaho | Nevada | Oak Ridge | Oakland | Ohio | Richland | Rocky Flats | SRS | Other | Unknown | Off-site Interface: | On site Interface:

- Maximum Programmatic Risk Score of 1 for a stream/TSD System
- Maximum Programmatic Risk Score of 2 or 3 for a stream/TSD System
- Maximum Programmatic Risk Score of 4 or 5 for a stream/TSD System
- No Programmatic Risk Score for a stream/TSD System

Rev. 6.1
12/6/01

Oak Ridge LLW Disposition Map

Dataset: IPABS-IS (9/27/01)

PREDECISIONAL DRAFT

This map is conceptual and in many cases does not represent cleanup or transfer decisions; this map does not preclude the on-going regulatory and stakeholder decision-making processes.

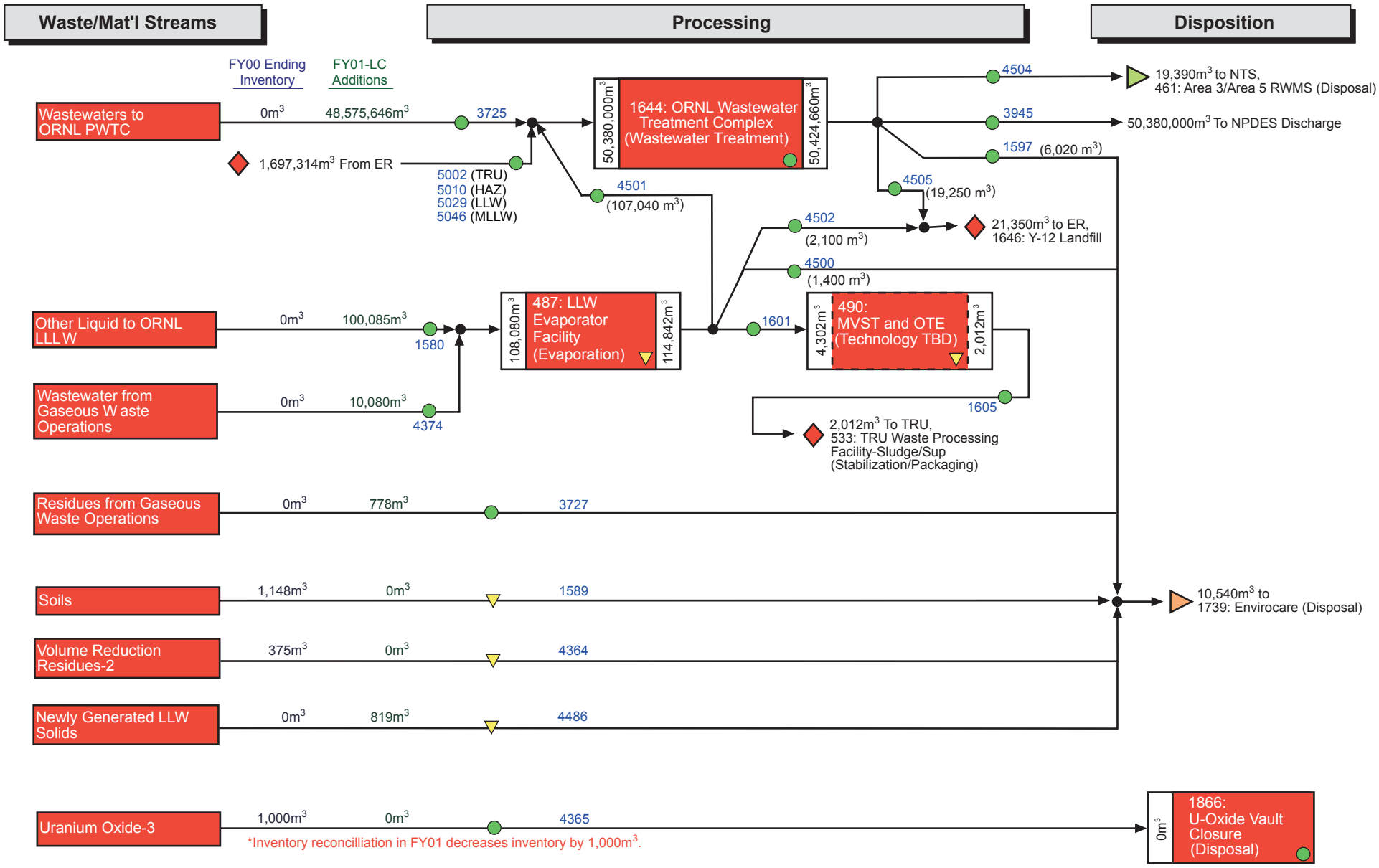

KEY: Albuquerque | Carlsbad | Chicago | Commercial | Idaho | Nevada | Oak Ridge | Oakland | Ohio | Richland | Rocky Flats | SRS | Other | Unknown | Off-site Interface: ▷ | On site Interface: ◇

● Maximum Programmatic Risk Score of 1 for a stream/TSD System

▼ Maximum Programmatic Risk Score of 2 or 3 for a stream/TSD System

● Maximum Programmatic Risk Score of 4 or 5 for a stream/TSD System

○ No Programmatic Risk Score for a stream/TSD System

Rev. 6.1
12/6/01

Dataset: IPABS-IS (9/27/01)

PREDECISIONAL DRAFT

This map is conceptual and in many cases does not represent cleanup or transfer decisions; this map does not preclude the on-going regulatory and stakeholder decision-making processes.

Oak Ridge LLW Disposition Map

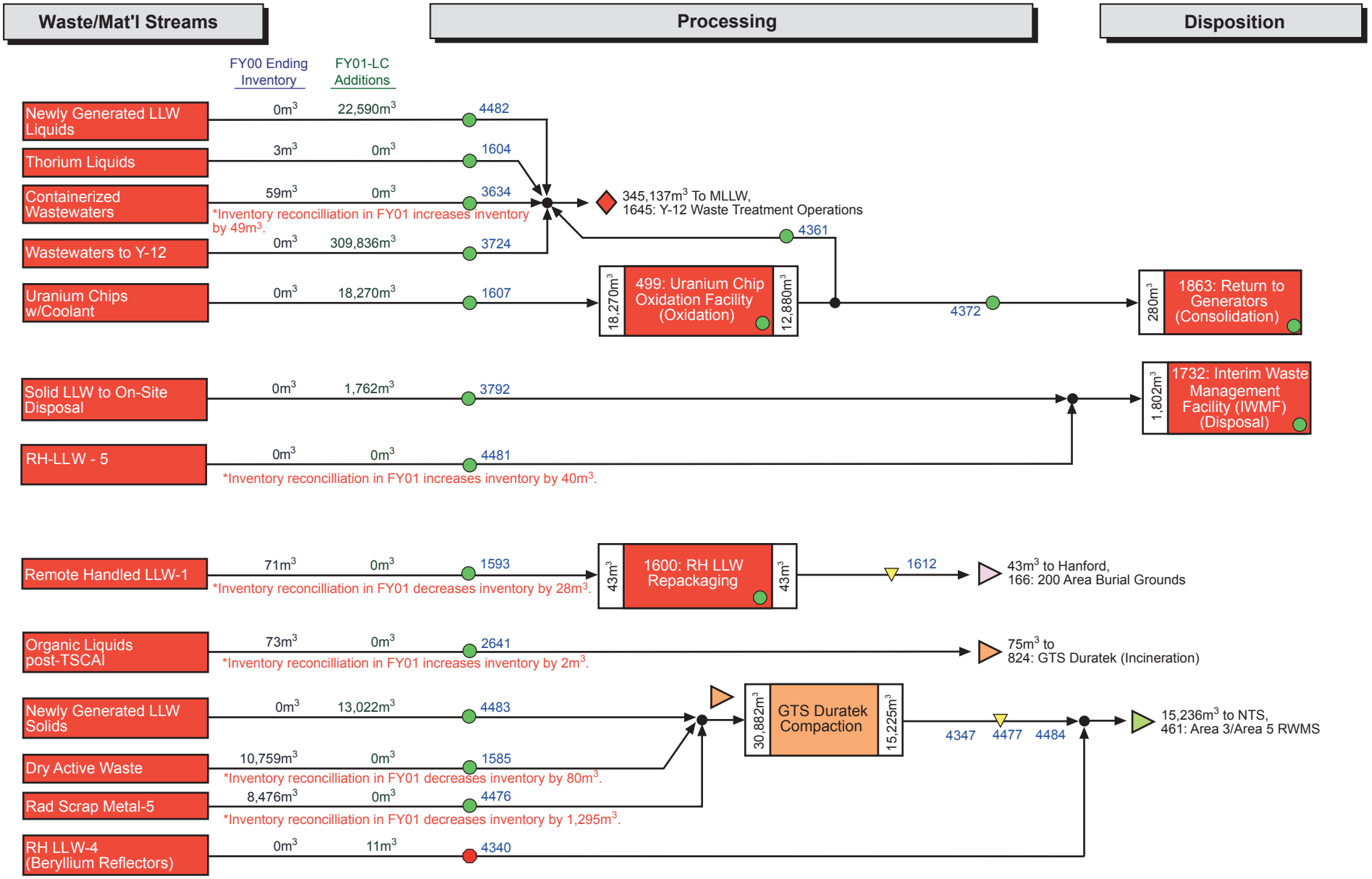

Dataset: IPABS-IS (9/27/01)

Oak Ridge MLLW Disposition Map

PREDECISIONAL DRAFT

This map is conceptual and in many cases does not represent cleanup or transfer decisions; this map does not preclude the on-going regulatory and stakeholder decision-making processes.

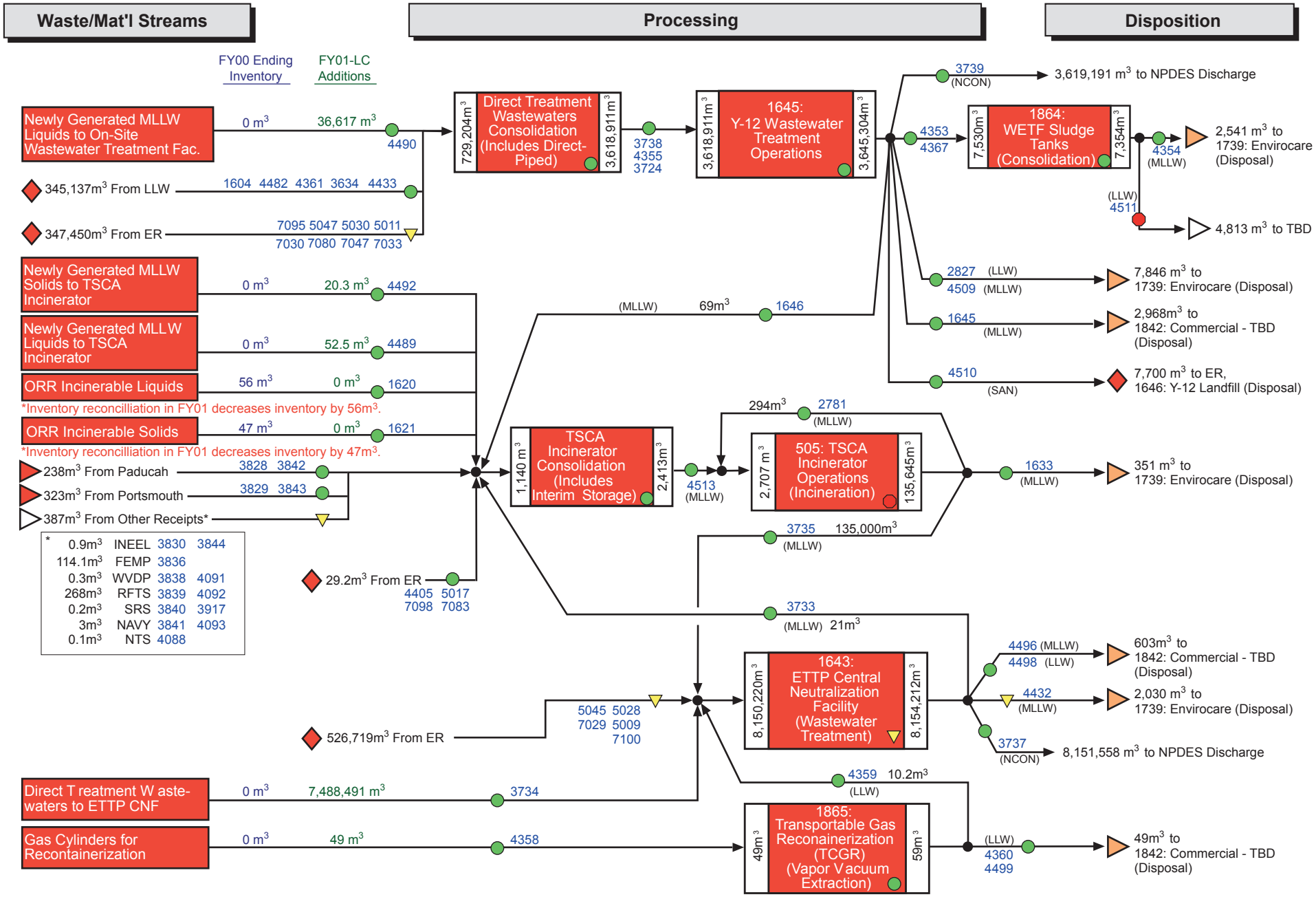

KEY: Albuquerque | Carlsbad | Chicago | Commercial | Idaho | Nevada | Oak Ridge | Oakland | Ohio | Richland | Rocky Flats | SRS | Other | Unknown | Off-site Interface: ▷ | On site Interface: ◇

● Maximum Programmatic Risk Score of 1 for a stream/TSD System
▼ Maximum Programmatic Risk Score of 2 or 3 for a stream/TSD System
⬢ Maximum Programmatic Risk Score of 4 or 5 for a stream/TSD System
○ No Programmatic Risk Score for a stream/TSD System

Rev. 6.1
12/6/01

Dataset: IPABS-IS (9/27/01)

PREDECISIONAL DRAFT

This map is conceptual and in many cases does not represent cleanup or transfer decisions; this map does not preclude the on-going regulatory and stakeholder decision-making processes.

Oak Ridge MLLW Disposition Map

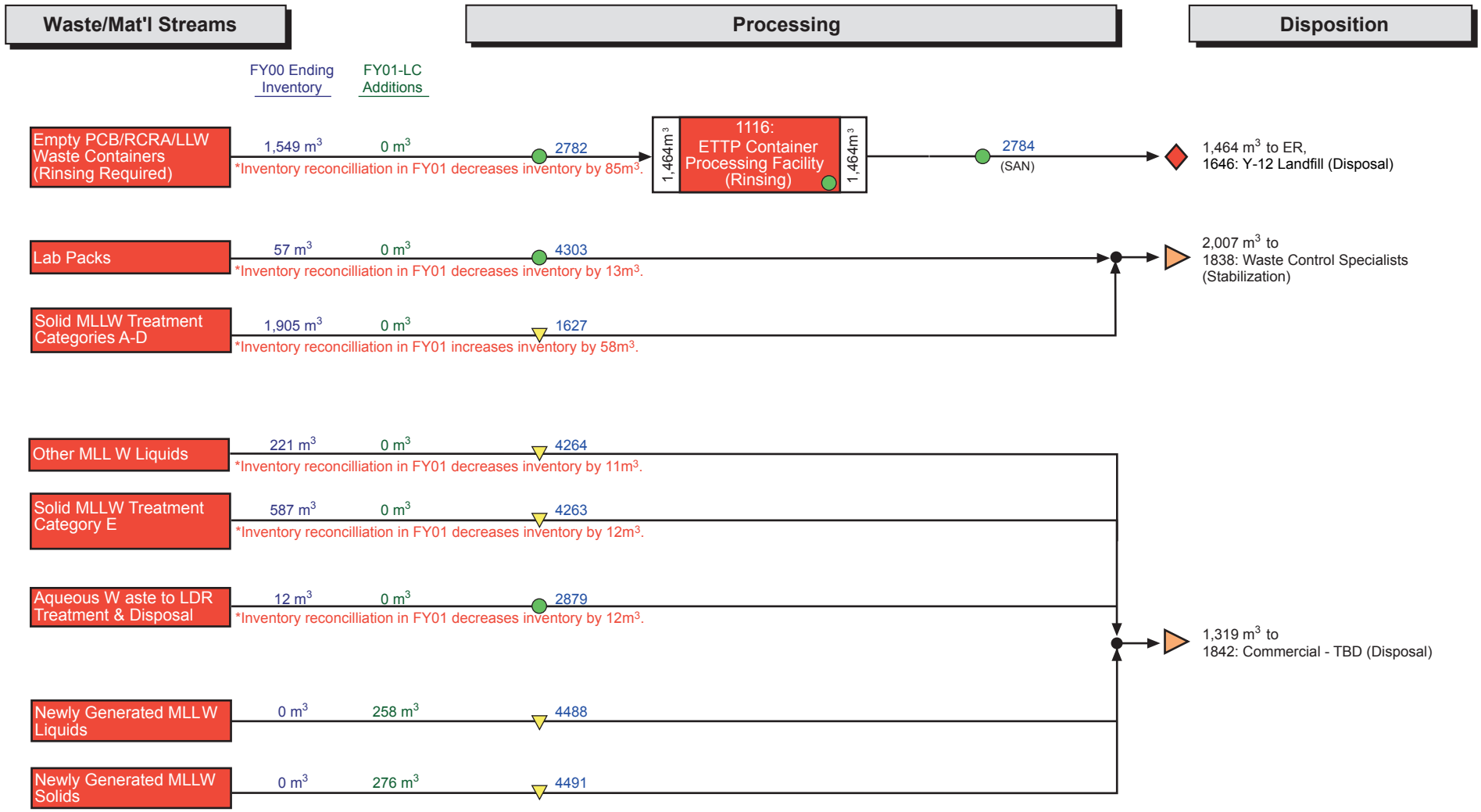

KEY: Albuquerque | Carlsbad | Chicago | Commercial | Idaho | Nevada | Oak Ridge | Oakland | Ohio | Richland | Rocky Flats | SRS | Other | Unknown | Off-site Interface: ▷ | On site Interface: ◇

● Maximum Programmatic Risk Score of 1 for a stream/TSD System

▼ Maximum Programmatic Risk Score of 2 or 3 for a stream/TSD System

● Maximum Programmatic Risk Score of 4 or 5 for a stream/TSD System

○ No Programmatic Risk Score for a stream/TSD System

Rev. 6.1
12/6/01

Oak Ridge SNF Disposition Map

Dataset: IPABS-IS (9/27/01)

PREDECISIONAL DRAFT

This map is conceptual and in many cases does not represent cleanup or transfer decisions; this map does not preclude the on-going regulatory and stakeholder decision-making processes.

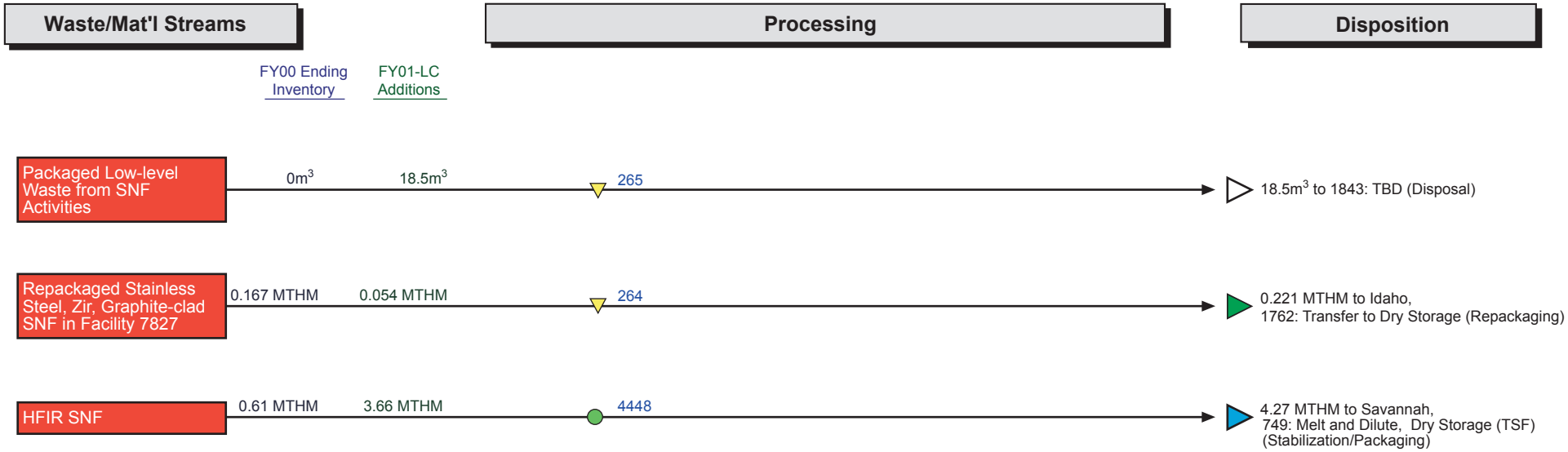

NOTE: The display of SNF material reflects performance guidance as modified by DOE in FY2000.

KEY: Albuquerque | Carlsbad | Chicago | Commercial | Idaho | Nevada | Oak Ridge | Oakland | Ohio | Richland | Rocky Flats | SRS | Other | Unknown | Off-site Interface: ▷ | On site Interface: ◇

● Maximum Programmatic Risk Score of 1 for a stream/TSD System

▼ Maximum Programmatic Risk Score of 2 or 3 for a stream/TSD System

● Maximum Programmatic Risk Score of 4 or 5 for a stream/TSD System

○ No Programmatic Risk Score for a stream/TSD System

Rev. 6.1
12/6/01

Oak Ridge TRU Disposition Map

Dataset: IPABS-IS (9/27/01)

PREDECISIONAL DRAFT

This map is conceptual and in many cases does not represent cleanup or transfer decisions; this map does not preclude the on-going regulatory and stakeholder decision-making processes.

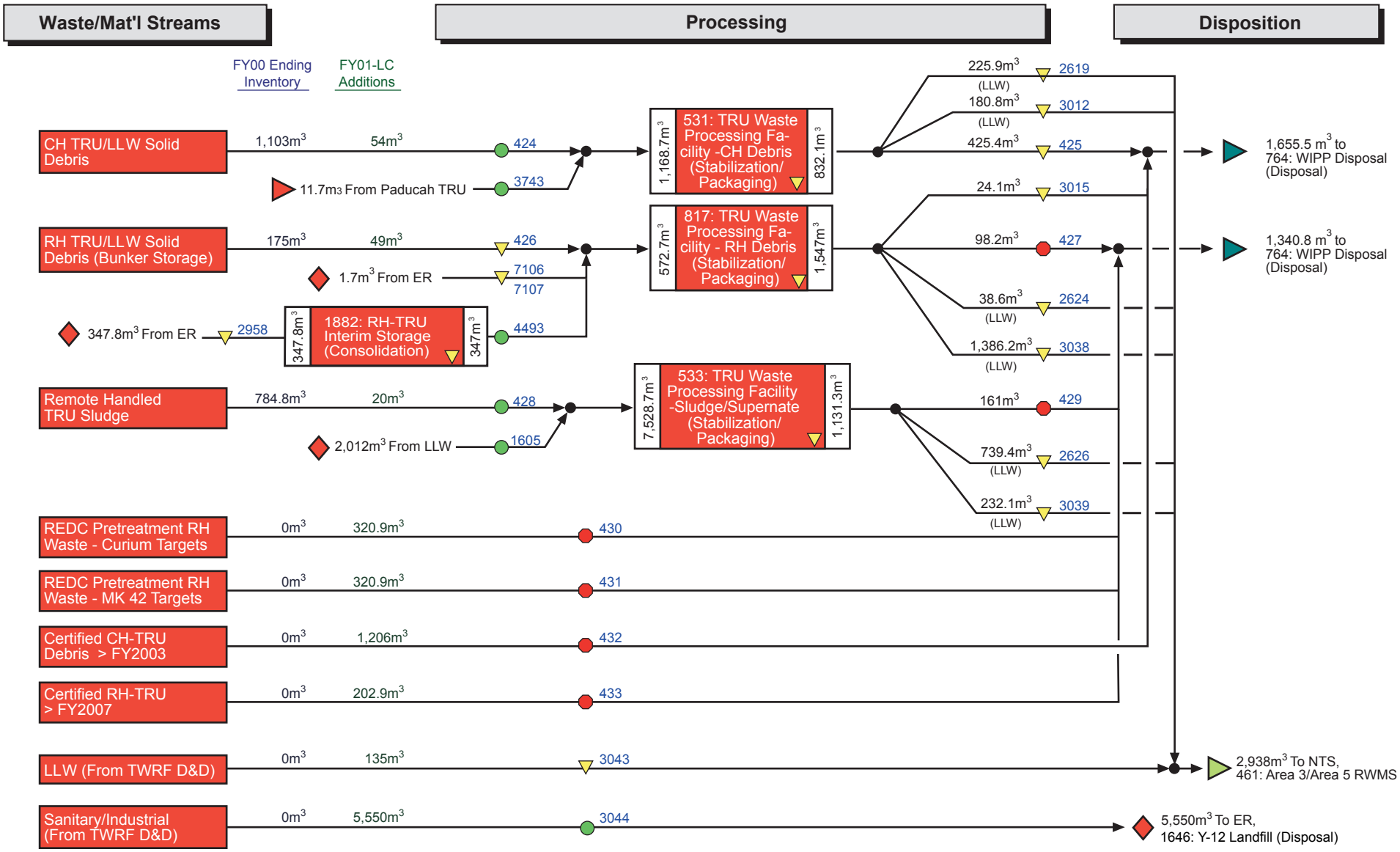

KEY: Albuquerque | Carlsbad | Chicago | Commercial | Idaho | Nevada | Oak Ridge | Oakland | Ohio | Richland | Rocky Flats | SRS | Other | Unknown | Off-site Interface: ▷ | On site Interface: ◇

● Maximum Programmatic Risk Score of 1 for a stream/TSD System

▼ Maximum Programmatic Risk Score of 2 or 3 for a stream/TSD System

⬢ Maximum Programmatic Risk Score of 4 or 5 for a stream/TSD System

○ No Programmatic Risk Score for a stream/TSD System

Rev. 6.1
12/6/01

Paducah ER Disposition Map

Dataset: IPABS-IS (9/27/01)

PREDECISIONAL DRAFT

This map is conceptual and in many cases does not represent cleanup or transfer decisions; this map does not preclude the on-going regulatory and stakeholder decision-making processes.

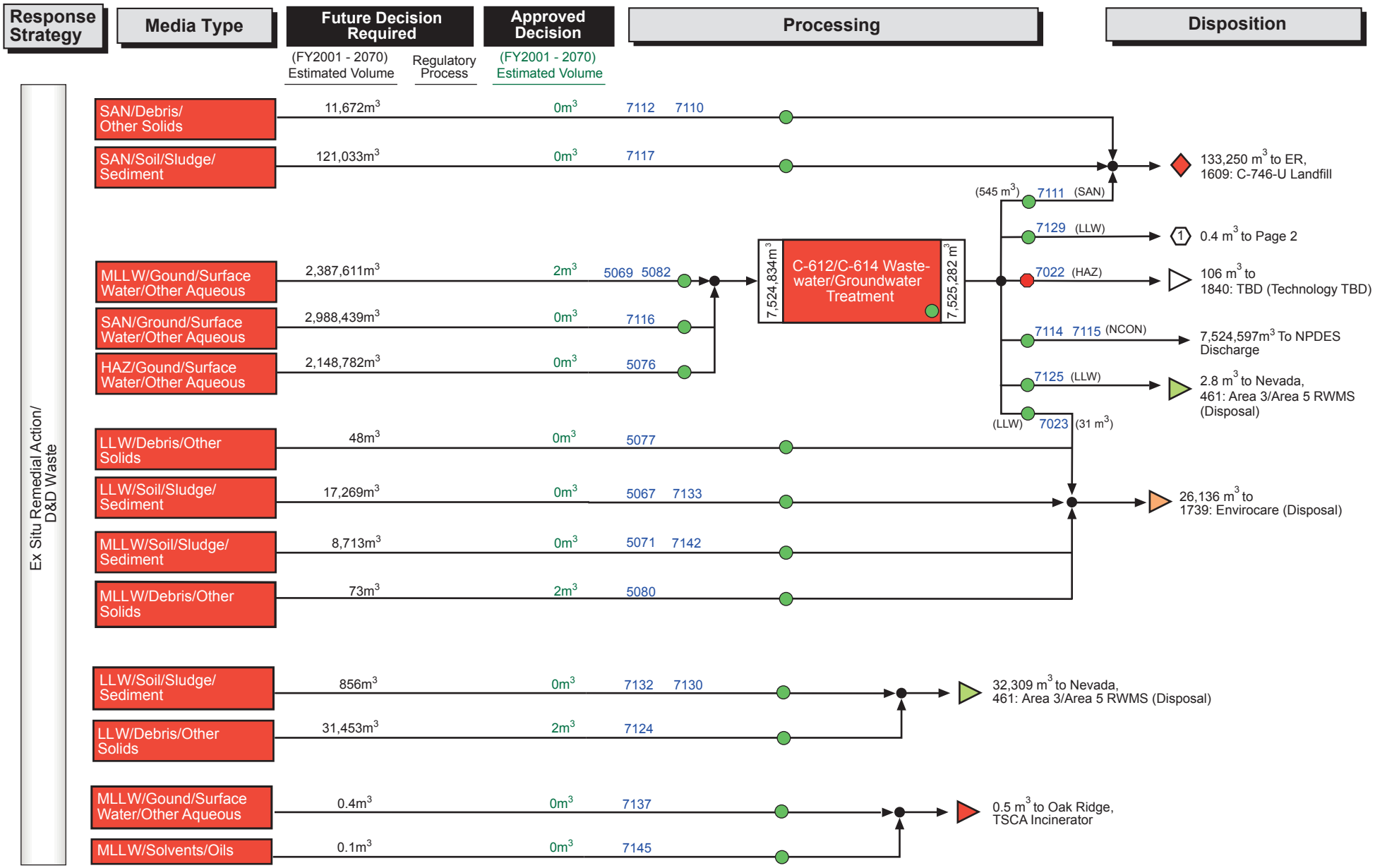

KEY: Albuquerque | Carlsbad | Chicago | Commercial | Idaho | Nevada | Oak Ridge | Oakland | Ohio | Richland | Rocky Flats | SRS | Other | Unknown | Off-site Interface: ▷ | On site Interface: ◇

● Maximum Programmatic Risk Score of 1 for a stream/TSD System

▼ Maximum Programmatic Risk Score of 2 or 3 for a stream/TSD System

● Maximum Programmatic Risk Score of 4 or 5 for a stream/TSD System

○ No Programmatic Risk Score for a stream/TSD System

Rev. 6.1
12/6/01

Paducah ER Disposition Map

Dataset: IPABS-IS (9/27/01)

PREDECISIONAL DRAFT

This map is conceptual and in many cases does not represent cleanup or transfer decisions; this map does not preclude the on-going regulatory and stakeholder decision-making processes.

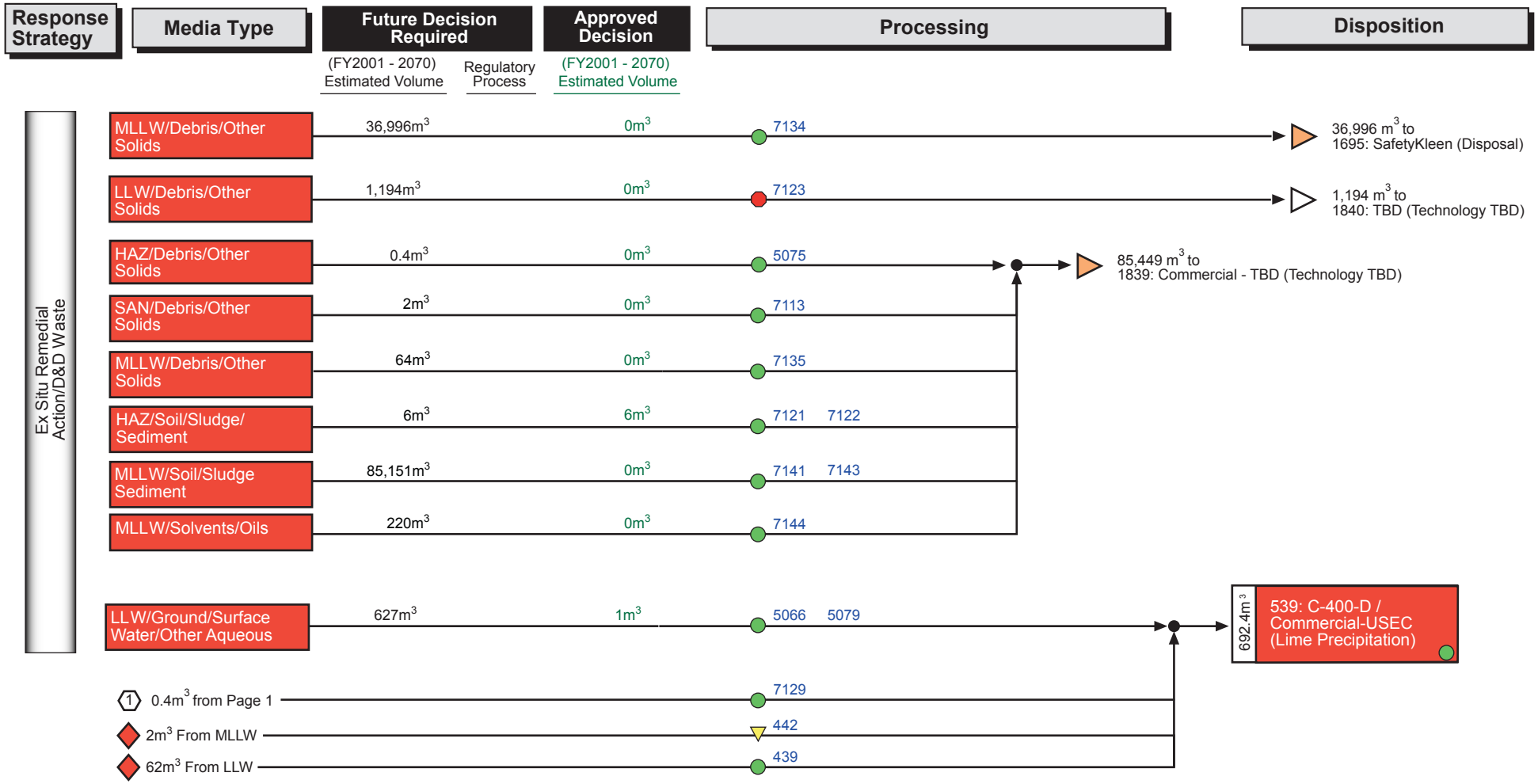

KEY: Albuquerque | Carlsbad | Chicago | Commercial | Idaho | Nevada | Oak Ridge | Oakland | Ohio | Richland | Rocky Flats | SRS | Other | Unknown | Off-site Interface: ▷ | On site Interface: ◇

● Maximum Programmatic Risk Score of 1 for a stream/TSD System

▼ Maximum Programmatic Risk Score of 2 or 3 for a stream/TSD System

⬢ Maximum Programmatic Risk Score of 4 or 5 for a stream/TSD System

○ No Programmatic Risk Score for a stream/TSD System

Rev. 6.1
12/6/01

Paducah HAZ Disposition Map

Dataset: IPABS-IS (9/27/01)

PREDECISIONAL DRAFT

This map is conceptual and in many cases does not represent cleanup or transfer decisions; this map does not preclude the on-going regulatory and stakeholder decision-making processes.

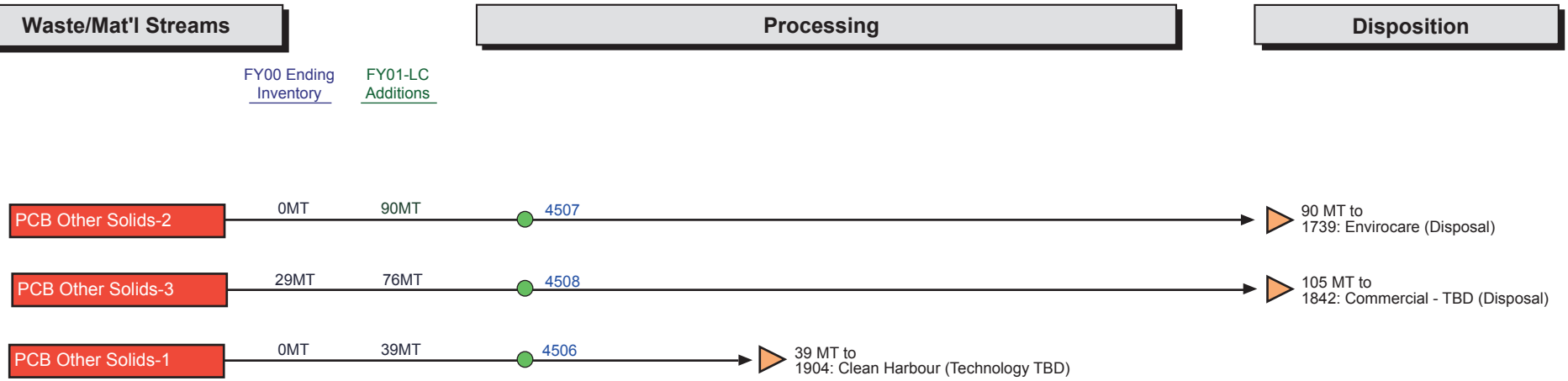

KEY: Albuquerque | Carlsbad | Chicago | Commercial | Idaho | Nevada | Oak Ridge | Oakland | Ohio | Richland | Rocky Flats | SRS | Other | Unknown | Off-site Interface: ▷ | On site Interface: ◇

● Maximum Programmatic Risk Score of 1 for a stream/TSD System

▼ Maximum Programmatic Risk Score of 2 or 3 for a stream/TSD System

⬢ Maximum Programmatic Risk Score of 4 or 5 for a stream/TSD System

○ No Programmatic Risk Score for a stream/TSD System

Rev. 6.1
12/6/01

Paducah LLW Disposition Map

Dataset: IPABS-IS (9/27/01)

PREDECISIONAL DRAFT

This map is conceptual and in many cases does not represent cleanup or transfer decisions; this map does not preclude the on-going regulatory and stakeholder decision-making processes.

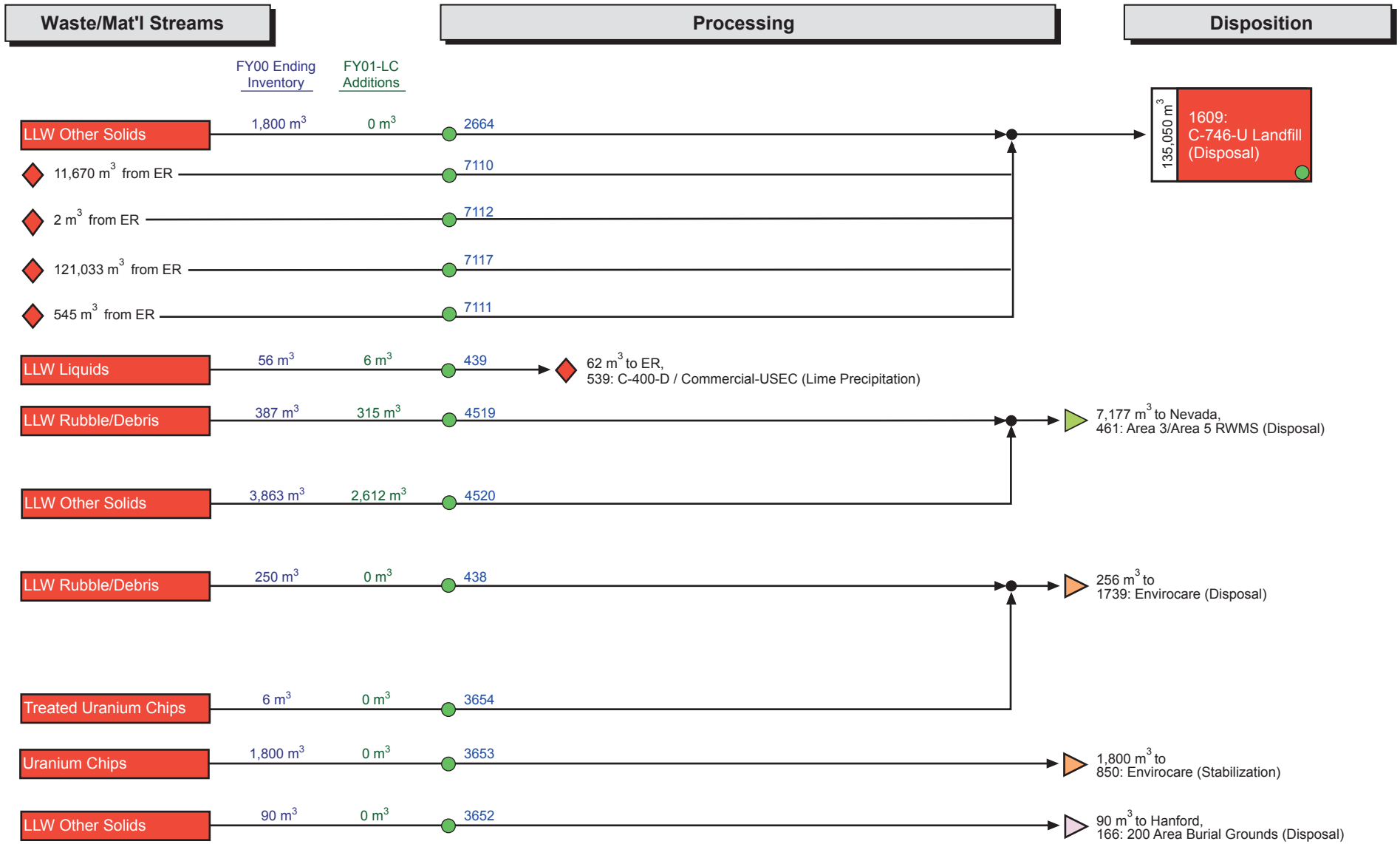

KEY: Albuquerque | Carlsbad | Chicago | Commercial | Idaho | Nevada | Oak Ridge | Oakland | Ohio | Richland | Rocky Flats | SRS | Other | Unknown | Off-site Interface: ▷ | On site Interface: ◇

● Maximum Programmatic Risk Score of 1 for a stream/TSD System

▼ Maximum Programmatic Risk Score of 2 or 3 for a stream/TSD System

⬢ Maximum Programmatic Risk Score of 4 or 5 for a stream/TSD System

○ No Programmatic Risk Score for a stream/TSD System

Rev. 6.1
12/6/01

Paducah MLLW Disposition Map

Dataset: IPABS-IS (9/27/01)

PREDECISIONAL DRAFT

This map is conceptual and in many cases does not represent cleanup or transfer decisions; this map does not preclude the on-going regulatory and stakeholder decision-making processes.

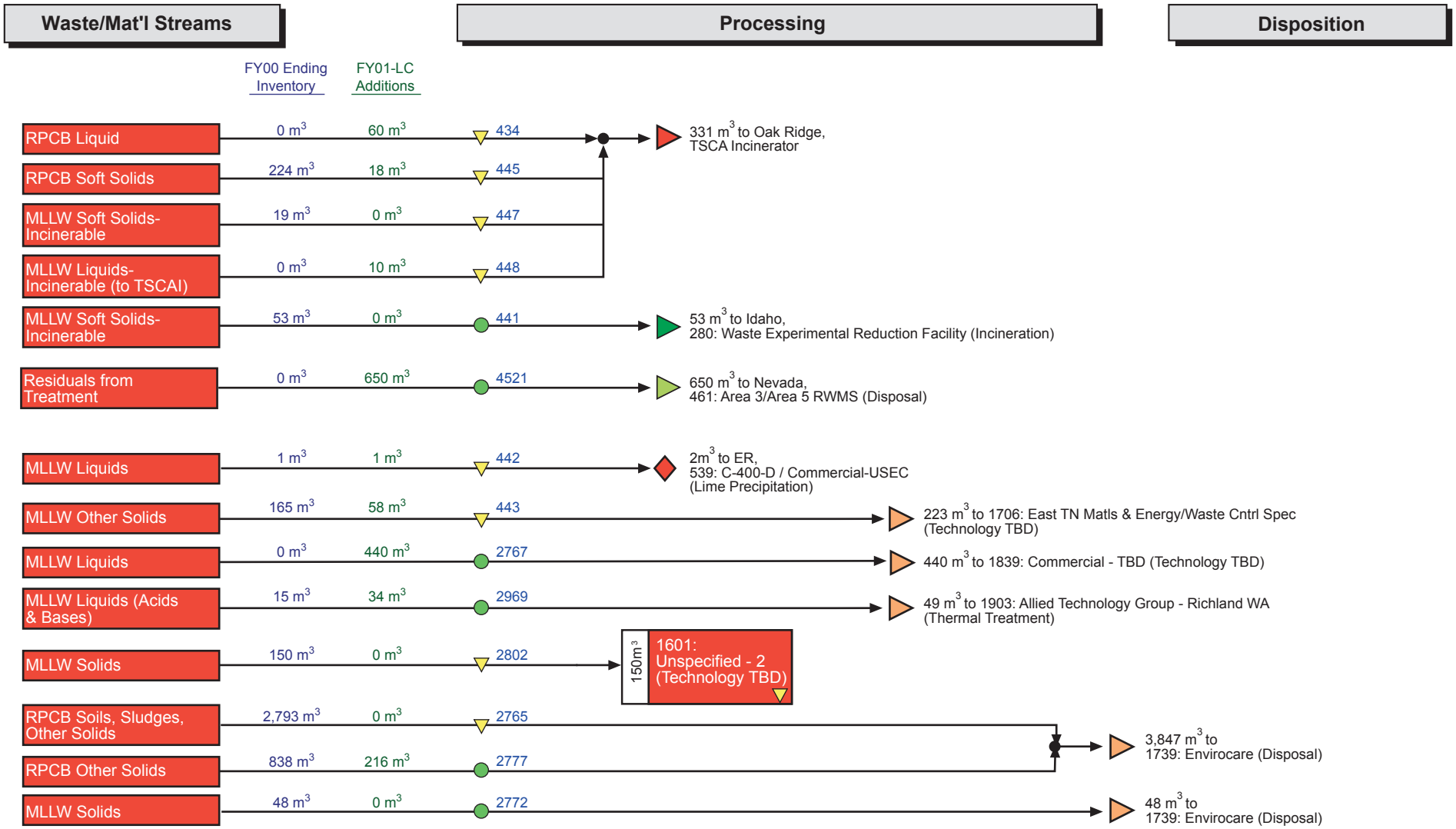

KEY: Albuquerque | Carlsbad | Chicago | Commercial | Idaho | Nevada | Oak Ridge | Oakland | Ohio | Richland | Rocky Flats | SRS | Other | Unknown | Off-site Interface: ▷ | On site Interface: ◇

● Maximum Programmatic Risk Score of 1 for a stream/TSD System

▼ Maximum Programmatic Risk Score of 2 or 3 for a stream/TSD System

● Maximum Programmatic Risk Score of 4 or 5 for a stream/TSD System

○ No Programmatic Risk Score for a stream/TSD System

Rev. 6.1
12/6/01

Paducah TRU Disposition Map

Dataset: IPABS-IS (9/27/01)

PREDECISIONAL DRAFT

This map is conceptual and in many cases does not represent cleanup or transfer decisions; this map does not preclude the on-going regulatory and stakeholder decision-making processes.

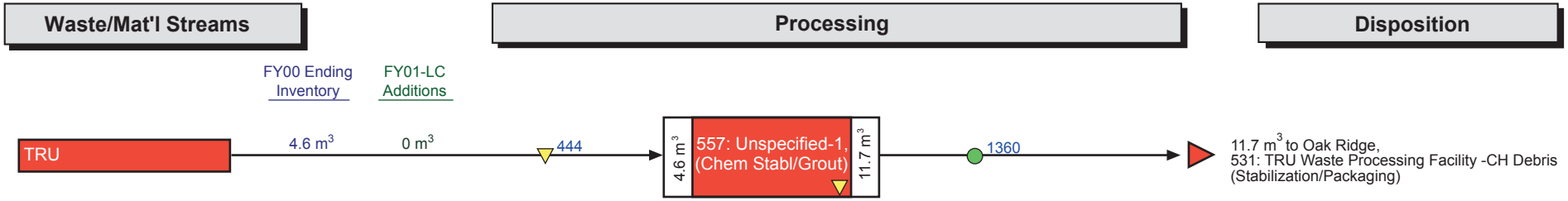

KEY: Albuquerque | Carlsbad | Chicago | Commercial | Idaho | Nevada | Oak Ridge | Oakland | Ohio | Richland | Rocky Flats | SRS | Other | Unknown | Off-site Interface: ▷ | On site Interface: ◇

● Maximum Programmatic Risk Score of 1 for a stream/TSD System

▼ Maximum Programmatic Risk Score of 2 or 3 for a stream/TSD System

● Maximum Programmatic Risk Score of 4 or 5 for a stream/TSD System

○ No Programmatic Risk Score for a stream/TSD System

Rev. 6.1
12/6/01

Portsmouth ER Disposition Map

Dataset: IPABS-IS (9/27/01)

PREDECISIONAL DRAFT

This map is conceptual and in many cases does not represent cleanup or transfer decisions; this map does not preclude the on-going regulatory and stakeholder decision-making processes.

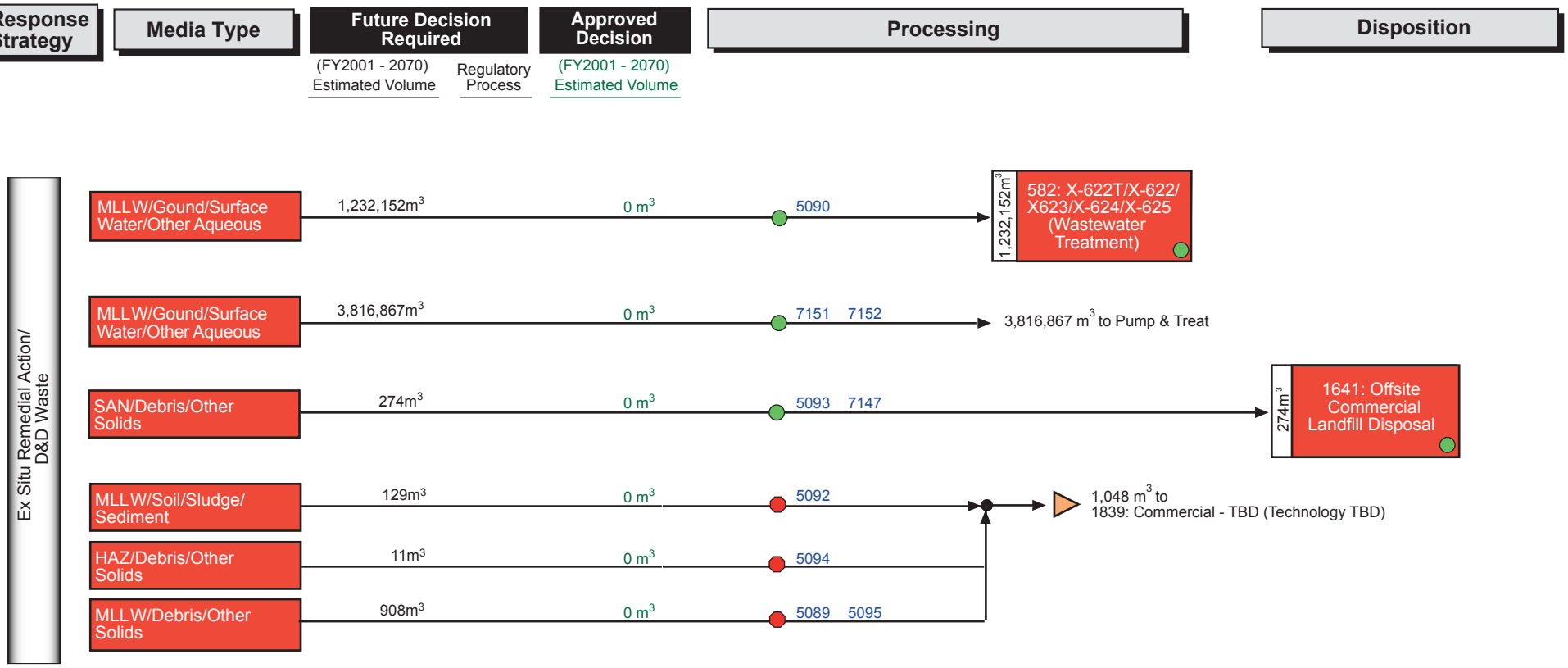

KEY: Albuquerque | Carlsbad | Chicago | Commercial | Idaho | Nevada | Oak Ridge | Oakland | Ohio | Richland | Rocky Flats | SRS | Other | Unknown | Off-site Interface: ▷ | On site Interface: ◇

● Maximum Programmatic Risk Score of 1 for a stream/TSD System

▼ Maximum Programmatic Risk Score of 2 or 3 for a stream/TSD System

● Maximum Programmatic Risk Score of 4 or 5 for a stream/TSD System

○ No Programmatic Risk Score for a stream/TSD System

Rev. 6.1
12/6/01

Portsmouth LLW Disposition Map

Dataset: IPABS-IS (9/27/01)

PREDECISIONAL DRAFT

This map is conceptual and in many cases does not represent cleanup or transfer decisions; this map does not preclude the on-going regulatory and stakeholder decision-making processes.

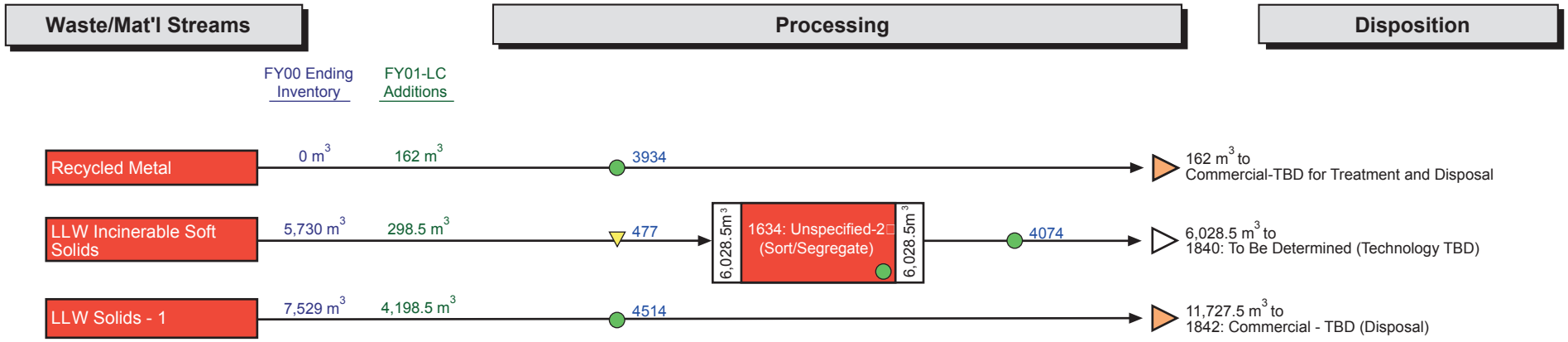

KEY: Albuquerque | Carlsbad | Chicago | Commercial | Idaho | Nevada | Oak Ridge | Oakland | Ohio | Richland | Rocky Flats | SRS | Other | Unknown | Off-site Interface: ▷ | On site Interface: ◇

● Maximum Programmatic Risk Score of 1 for a stream/TSD System

▼ Maximum Programmatic Risk Score of 2 or 3 for a stream/TSD System

⬢ Maximum Programmatic Risk Score of 4 or 5 for a stream/TSD System

○ No Programmatic Risk Score for a stream/TSD System

Rev. 6.1
12/6/01

Dataset: IPABS-IS (9/27/01)

PREDECISIONAL DRAFT

This map is conceptual and in many cases does not represent cleanup or transfer decisions; this map does not preclude the on-going regulatory and stakeholder decision-making processes.

Portsmouth MLLW Disposition Map

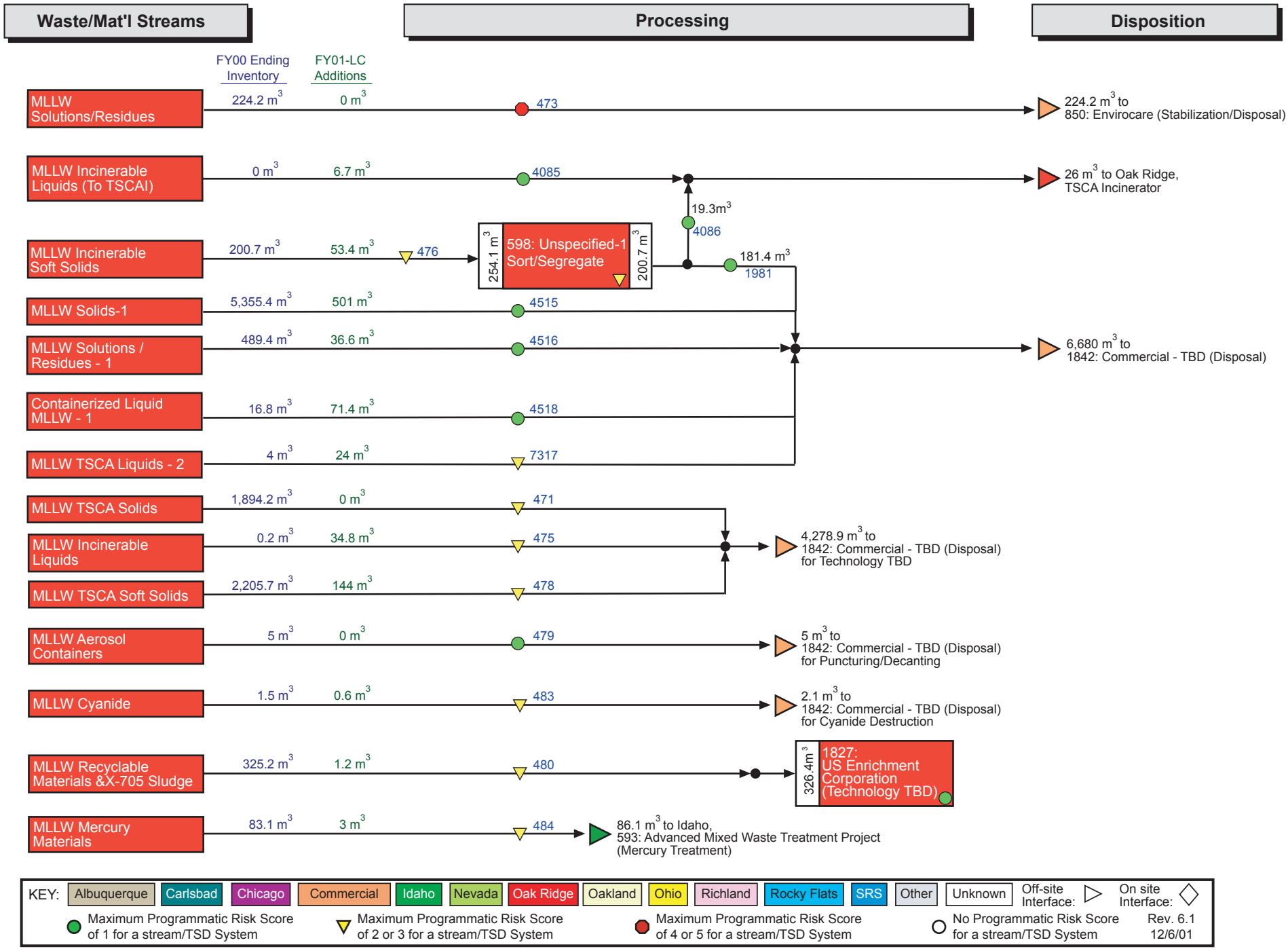

Weldon Spring ER Disposition Map

Dataset: IPABS-IS (9/27/01)

PREDECISIONAL DRAFT

This map is conceptual and in many cases does not represent cleanup or transfer decisions; this map does not preclude the on-going regulatory and stakeholder decision-making processes.

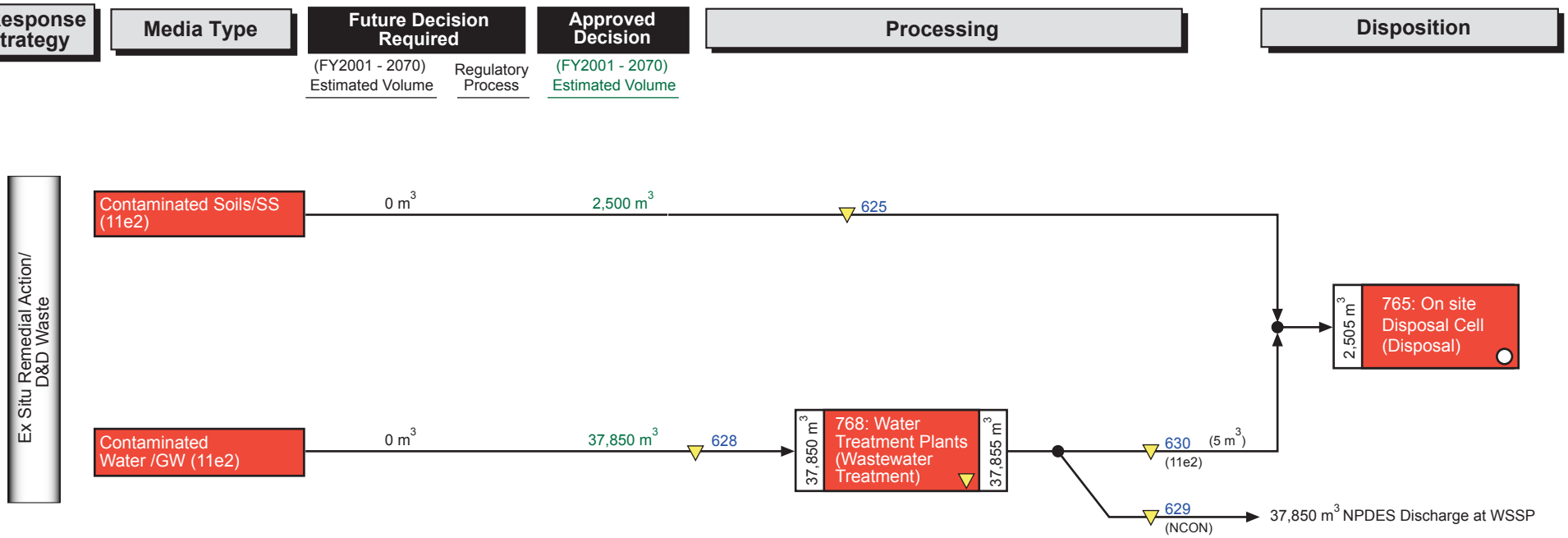

KEY: Albuquerque | Carlsbad | Chicago | Commercial | Idaho | Nevada | Oak Ridge | Oakland | Ohio | Richland | Rocky Flats | SRS | Other | Unknown | Off-site Interface: ▷ | On site Interface: ◇

● Maximum Programmatic Risk Score of 1 for a stream/TSD System

▼ Maximum Programmatic Risk Score of 2 or 3 for a stream/TSD System

● Maximum Programmatic Risk Score of 4 or 5 for a stream/TSD System

○ No Programmatic Risk Score for a stream/TSD System

Rev. 6.1
12/6/01