Dataset: IPABS-IS (8/28/01)

Inhalation Toxicology Laboratory HAZ Disposition Map

PREDECISIONAL DRAFT

This map is conceptual and in many cases does not represent cleanup or transfer decisions; this map does not preclude the on-going regulatory and stakeholder decision-making processes.

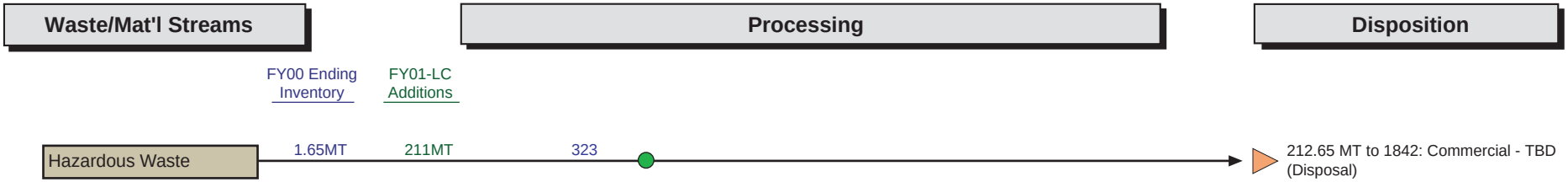

KEY: Albuquerque | Carlsbad | Chicago | Commercial | Idaho | Nevada | Oak Ridge | Oakland | Ohio | Richland | Rocky Flats | SRS | Other | Unknown | Off-site Interface: | On site Interface:

Maximum Programmatic Risk Score of 1 for a stream/TSD System

Maximum Programmatic Risk Score of 2 or 3 for a stream/TSD System

Maximum Programmatic Risk Score of 4 or 5 for a stream/TSD System

No Programmatic Risk Score for a stream/TSD System

Rev. 6.0
10/5/01

Dataset: IPABS-IS (8/28/01)

Inhalation Toxicology Laboratory LLW Disposition Map

PREDECISIONAL DRAFT

This map is conceptual and in many cases does not represent cleanup or transfer decisions; this map does not preclude the on-going regulatory and stakeholder decision-making processes.

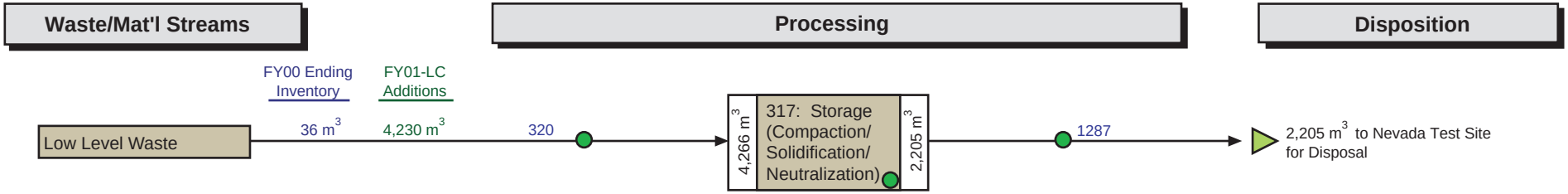

KEY: Albuquerque | Carlsbad | Chicago | Commercial | Idaho | Nevada | Oak Ridge | Oakland | Ohio | Richland | Rocky Flats | SRS | Other | Unknown | Off-site Interface: ▷ | On site Interface: ◇

● Maximum Programmatic Risk Score of 1 for a stream/TSD System

▼ Maximum Programmatic Risk Score of 2 or 3 for a stream/TSD System

⬢ Maximum Programmatic Risk Score of 4 or 5 for a stream/TSD System

○ No Programmatic Risk Score for a stream/TSD System

Rev. 6.0
10/5/01

Dataset: IPABS-IS (8/28/01)

Inhalation Toxicology Laboratory MLLW Disposition Map

PREDECISIONAL DRAFT

This map is conceptual and in many cases does not represent cleanup or transfer decisions; this map does not preclude the on-going regulatory and stakeholder decision-making processes.

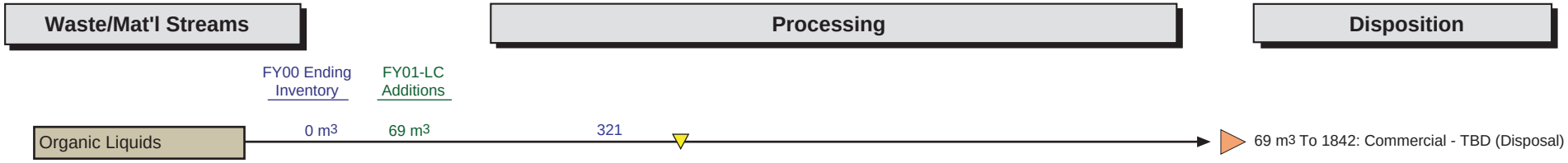

KEY: Albuquerque | Carlsbad | Chicago | Commercial | Idaho | Nevada | Oak Ridge | Oakland | Ohio | Richland | Rocky Flats | SRS | Other | Unknown | Off-site Interface: ▷ | On site Interface: ◇

● Maximum Programmatic Risk Score of 1 for a stream/TSD System

▼ Maximum Programmatic Risk Score of 2 or 3 for a stream/TSD System

⬢ Maximum Programmatic Risk Score of 4 or 5 for a stream/TSD System

○ No Programmatic Risk Score for a stream/TSD System

Rev. 6.0
10/5/01

Dataset: IPABS-IS (8/28/01)

PREDECISIONAL DRAFT

This map is conceptual and in many cases does not represent cleanup or transfer decisions; this map does not preclude the on-going regulatory and stakeholder decision-making processes.

Inhalation Toxicology Laboratory TRU Disposition Map

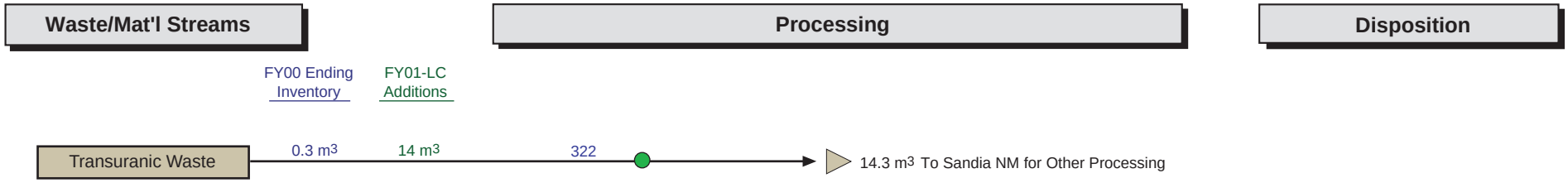

KEY: Albuquerque | Carlsbad | Chicago | Commercial | Idaho | Nevada | Oak Ridge | Oakland | Ohio | Richland | Rocky Flats | SRS | Other | Unknown | Off-site Interface: ▷ | On site Interface: ◇

● Maximum Programmatic Risk Score of 1 for a stream/TSD System

▼ Maximum Programmatic Risk Score of 2 or 3 for a stream/TSD System

● Maximum Programmatic Risk Score of 4 or 5 for a stream/TSD System

○ No Programmatic Risk Score for a stream/TSD System

Rev. 6.0
10/5/01

Kansas City ER Disposition Map

Dataset: IPABS-IS (8/28/01)

PREDECISIONAL DRAFT

This map is conceptual and in many cases does not represent cleanup or transfer decisions; this map does not preclude the on-going regulatory and stakeholder decision-making processes.

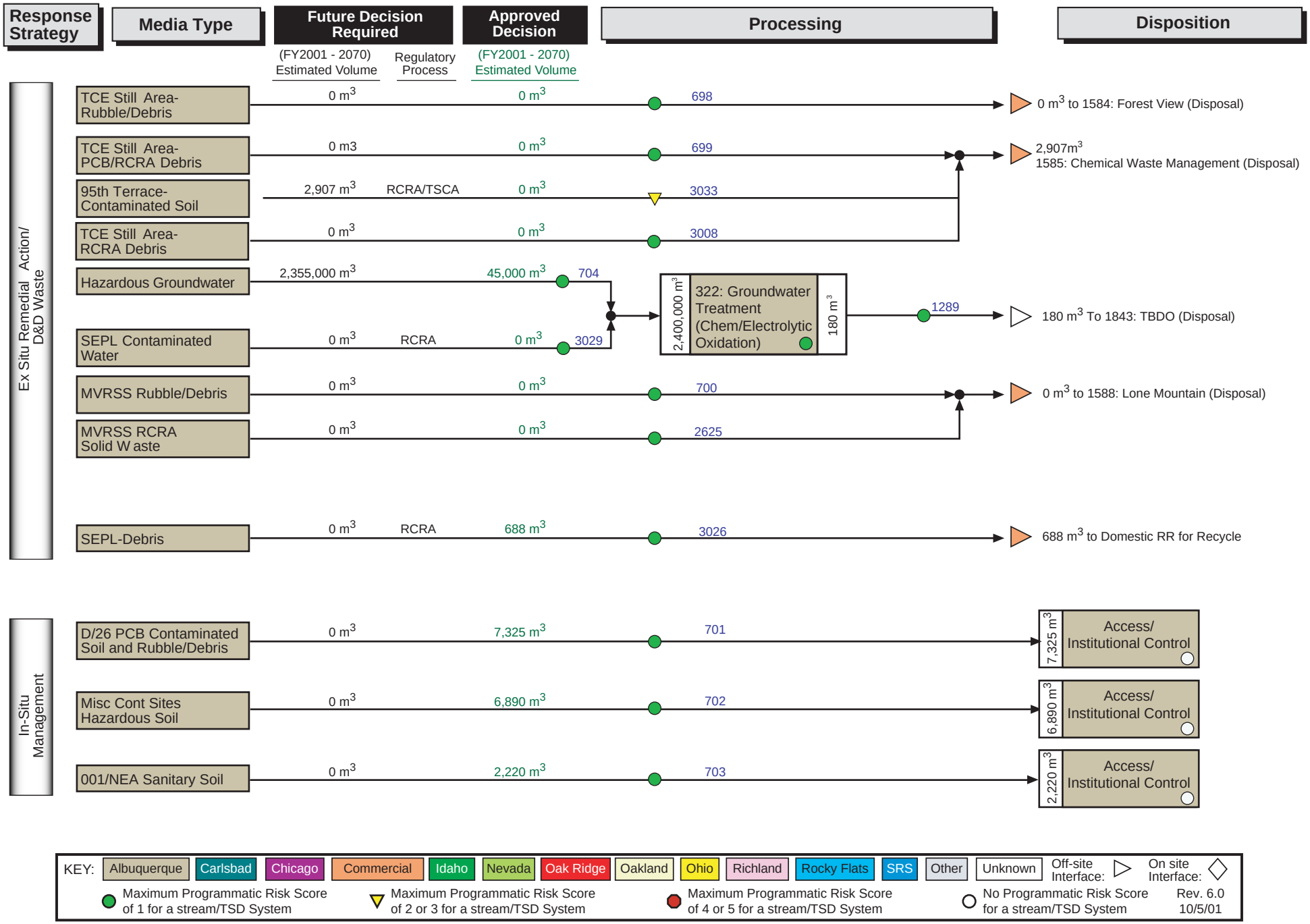

Kansas City HAZ Disposition Map

Dataset: IPABS-IS (8/28/01)

PREDECISIONAL DRAFT

This map is conceptual and in many cases does not represent cleanup or transfer decisions; this map does not preclude the on-going regulatory and stakeholder decision-making processes.

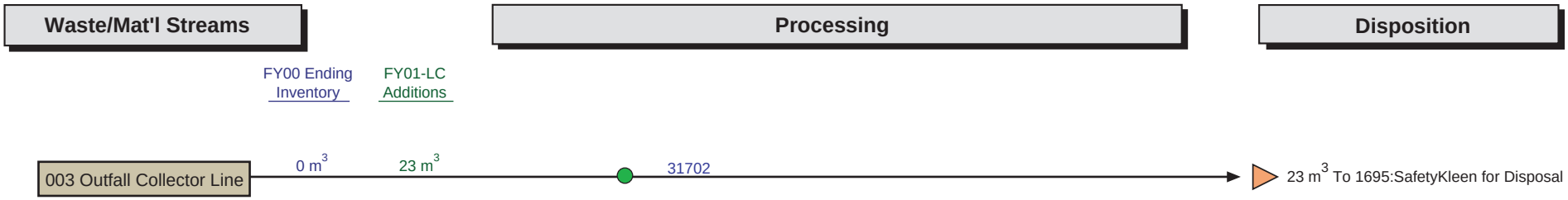

KEY: Albuquerque | Carlsbad | Chicago | Commercial | Idaho | Nevada | Oak Ridge | Oakland | Ohio | Richland | Rocky Flats | SRS | Other | Unknown | Off-site Interface: | On site Interface:

Maximum Programmatic Risk Score of 1 for a stream/TSD System

Maximum Programmatic Risk Score of 2 or 3 for a stream/TSD System

Maximum Programmatic Risk Score of 4 or 5 for a stream/TSD System

No Programmatic Risk Score for a stream/TSD System

Rev. 6.0
10/5/01

Kansas City LLW Disposition Map

Dataset: IPABS-IS (8/28/01)

PREDECISIONAL DRAFT

This map is conceptual and in many cases does not represent cleanup or transfer decisions; this map does not preclude the on-going regulatory and stakeholder decision-making processes.

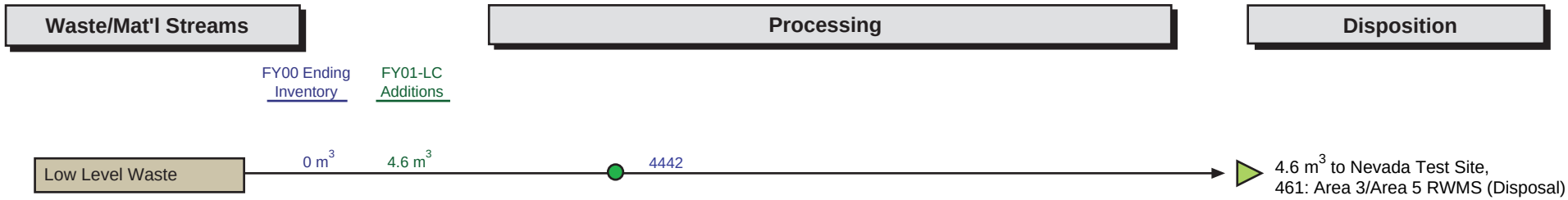

KEY: Albuquerque | Carlsbad | Chicago | Commercial | Idaho | Nevada | Oak Ridge | Oakland | Ohio | Richland | Rocky Flats | SRS | Other | Unknown | Off-site Interface: ▷ | On site Interface: ◇

● Maximum Programmatic Risk Score of 1 for a stream/TSD System

▼ Maximum Programmatic Risk Score of 2 or 3 for a stream/TSD System

⬢ Maximum Programmatic Risk Score of 4 or 5 for a stream/TSD System

○ No Programmatic Risk Score for a stream/TSD System

Rev. 6.0
10/5/01

Los Alamos ER Disposition Map

Dataset: IPABS-IS (8/28/01)

PREDECISIONAL DRAFT

This map is conceptual and in many cases does not represent cleanup or transfer decisions; this map does not preclude the on-going regulatory and stakeholder decision-making processes.

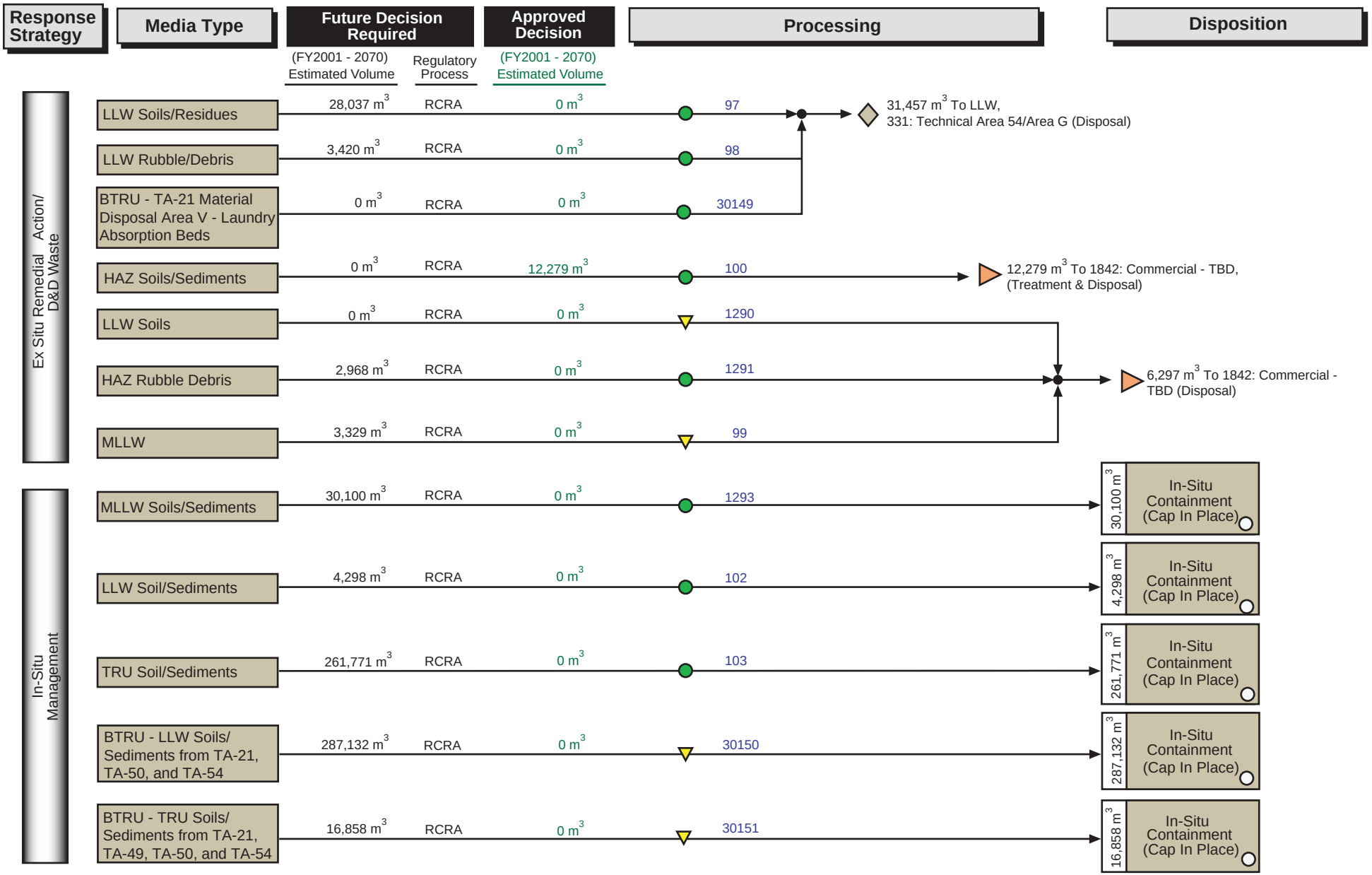

Dataset: IPABS-IS (8/28/01)

PREDECISIONAL DRAFT

This map is conceptual and in many cases does not represent cleanup or transfer decisions; this map does not preclude the on-going regulatory and stakeholder decision-making processes.

Los Alamos LLW Disposition Map

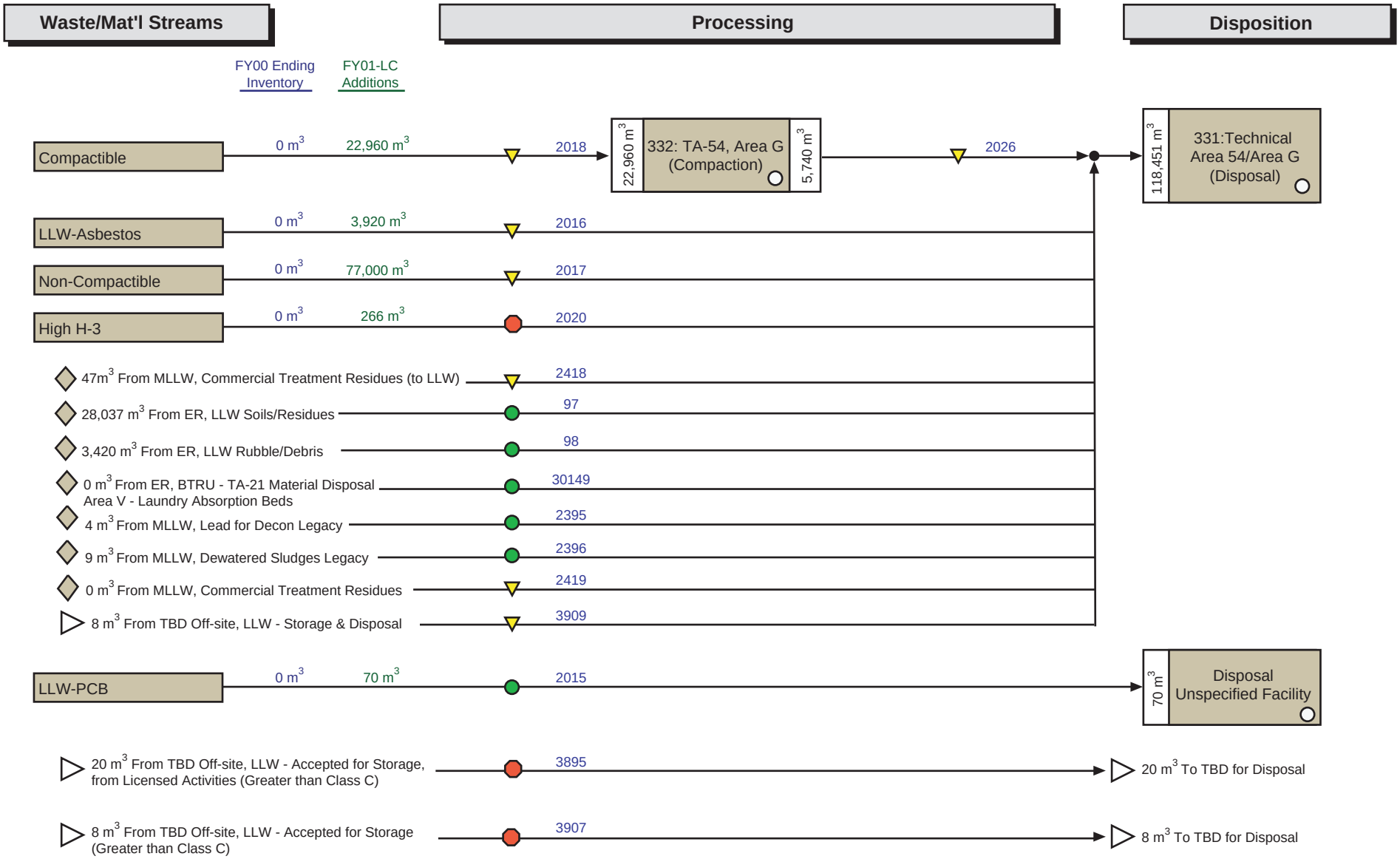

KEY: Albuquerque | Carlsbad | Chicago | Commercial | Idaho | Nevada | Oak Ridge | Oakland | Ohio | Richland | Rocky Flats | SRS | Other | Unknown | Off-site Interface: ▷ | On site Interface: ◇

● Maximum Programmatic Risk Score of 1 for a stream/TSD System

▼ Maximum Programmatic Risk Score of 2 or 3 for a stream/TSD System

● Maximum Programmatic Risk Score of 4 or 5 for a stream/TSD System

○ No Programmatic Risk Score for a stream/TSD System

Rev. 6.0
10/5/01

Dataset: IPABS-IS (8/28/01)

Los Alamos MLLW Disposition Map

PREDECISIONAL DRAFT

This map is conceptual and in many cases does not represent cleanup or transfer decisions; this map does not preclude the on-going regulatory and stakeholder decision-making processes.

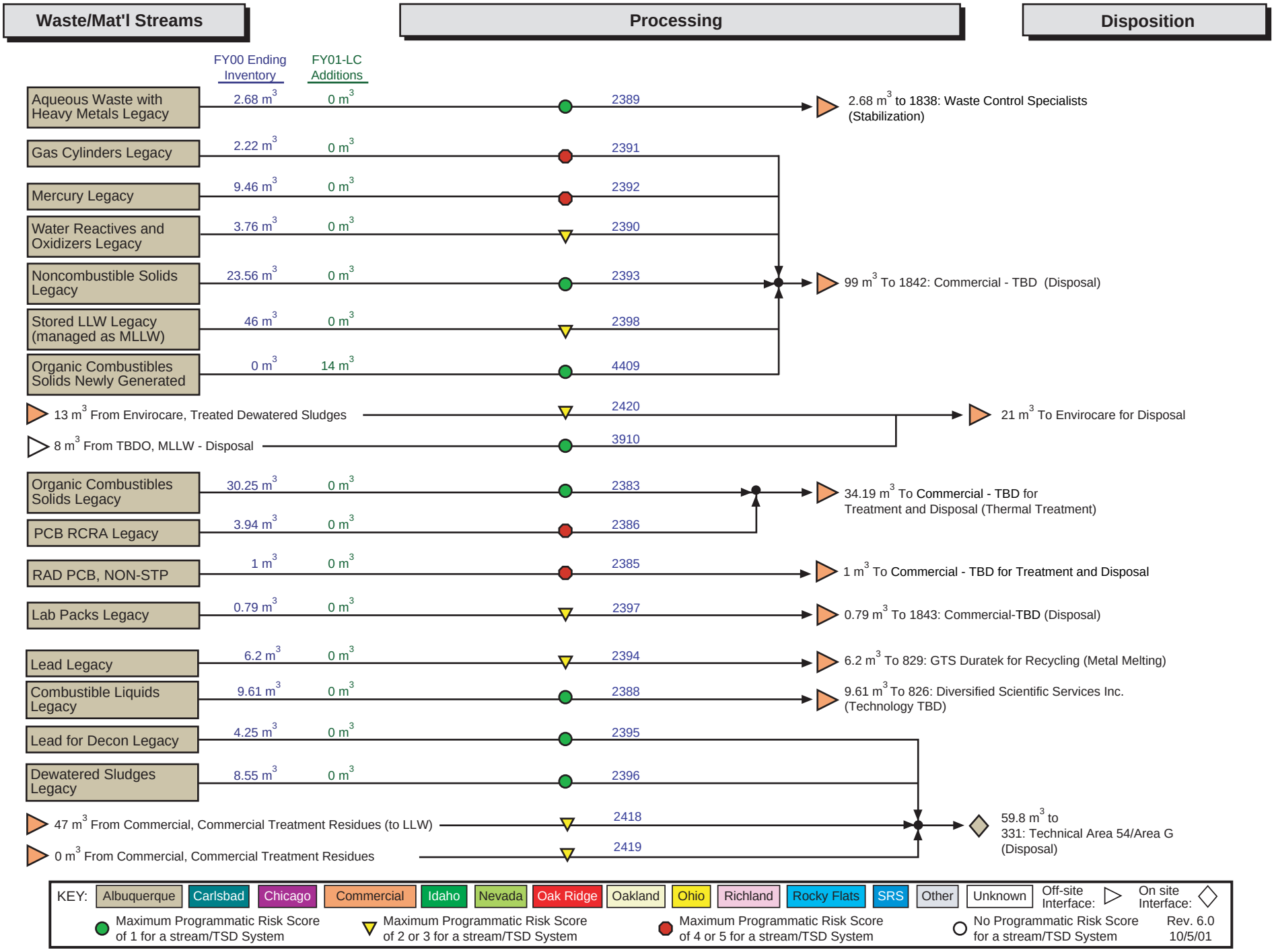

Dataset: IPABS-IS (8/28/01)

Los Alamos TRU Disposition Map

PREDECISIONAL DRAFT

This map is conceptual and in many cases does not represent cleanup or transfer decisions; this map does not preclude the on-going regulatory and stakeholder decision-making processes.

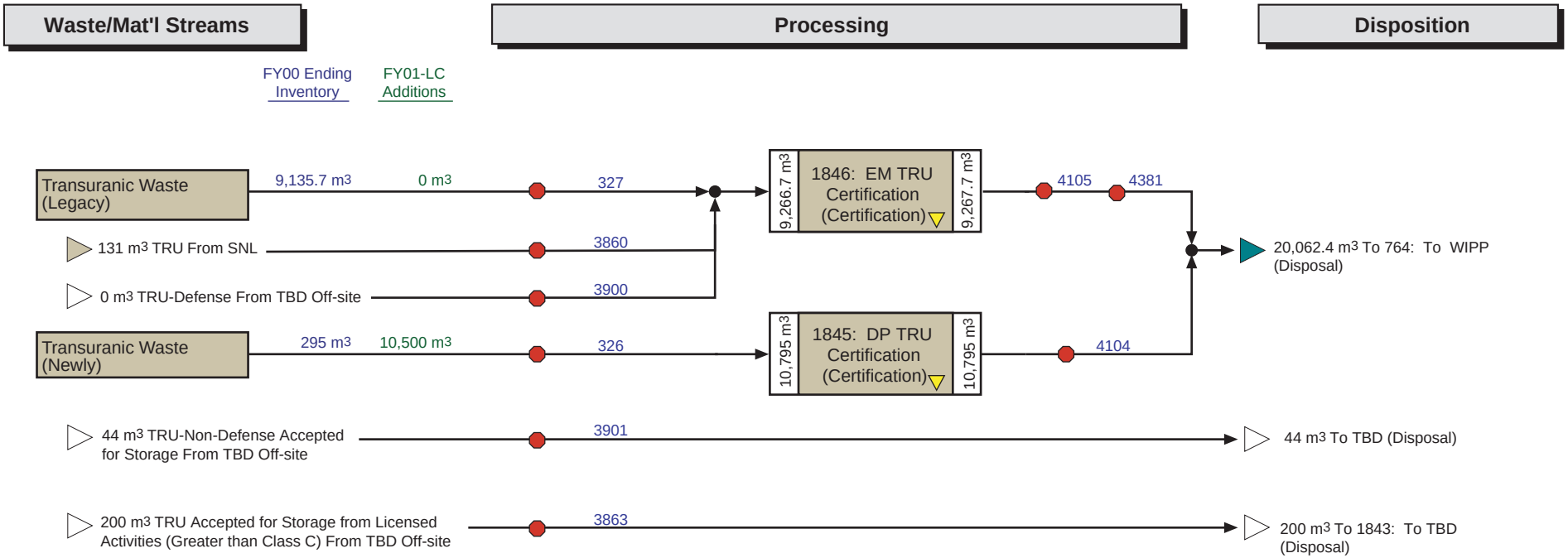

KEY: Albuquerque | Carlsbad | Chicago | Commercial | Idaho | Nevada | Oak Ridge | Oakland | Ohio | Richland | Rocky Flats | SRS | Other | Unknown | Off-site Interface: ▷ | On site Interface: ◇

● Maximum Programmatic Risk Score of 1 for a stream/TSD System

▼ Maximum Programmatic Risk Score of 2 or 3 for a stream/TSD System

● Maximum Programmatic Risk Score of 4 or 5 for a stream/TSD System

○ No Programmatic Risk Score for a stream/TSD System

Rev. 6.0
10/5/01

Pantex ER Disposition Map

Dataset: IPABS-IS (8/28/01)

PREDECISIONAL DRAFT

This map is conceptual and in many cases does not represent cleanup or transfer decisions; this map does not preclude the on-going regulatory and stakeholder decision-making processes.

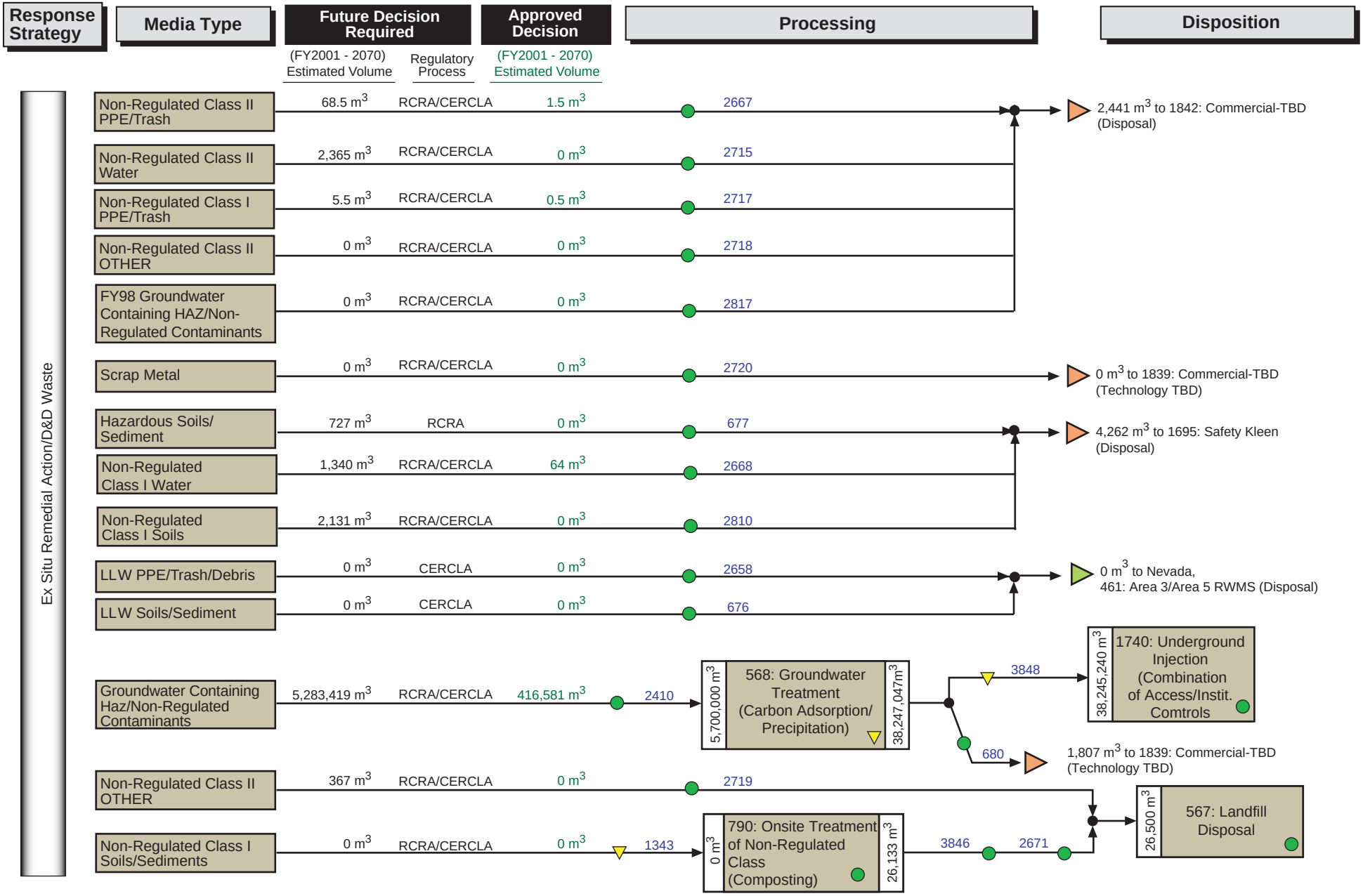

KEY: Albuquerque | Carlsbad | Chicago | Commercial | Idaho | Nevada | Oak Ridge | Oakland | Ohio | Richland | Rocky Flats | SRS | Other | Unknown | Off-site Interface: ▷ | On site Interface: ◇

● Maximum Programmatic Risk Score of 1 for a stream/TSD System

▼ Maximum Programmatic Risk Score of 2 or 3 for a stream/TSD System

● Maximum Programmatic Risk Score of 4 or 5 for a stream/TSD System

○ No Programmatic Risk Score for a stream/TSD System

Rev. 6.0
10/5/01

Pantex ER Disposition Map

Dataset: IPABS-IS (8/28/01)

PREDECISIONAL DRAFT

This map is conceptual and in many cases does not represent cleanup or transfer decisions; this map does not preclude the on-going regulatory and stakeholder decision-making processes.

Response Strategy	Media Type	Future Decision Required (FY2001 - 2070) Estimated Volume	Regulatory Process	Approved Decision (FY2001 - 2070) Estimated Volume	Processing	Disposition
In-Situ Management	Non-Regulated Soils/ Sediments	121,406 m^3	RCRA/CERCLA	0 m^3	1344	121,406 m^3 In Situ Containment (Cap in Place)
	Non-Regulated Soils/ Sediments	3,451,000 m^3	RCRA/CERCLA	0 m^3	1346	3,451,000 m^3 Access/ Institutional Control (Ownership, Use or Deed Restrictions)

KEY: Albuquerque | Carlsbad | Chicago | Commercial | Idaho | Nevada | Oak Ridge | Oakland | Ohio | Richland | Rocky Flats | SRS | Other | Unknown | Off-site Interface: ▷ | On site Interface: ◇

● Maximum Programmatic Risk Score of 1 for a stream/TSD System

▼ Maximum Programmatic Risk Score of 2 or 3 for a stream/TSD System

● Maximum Programmatic Risk Score of 4 or 5 for a stream/TSD System

○ No Programmatic Risk Score for a stream/TSD System

Rev. 6.0
10/5/01

Dataset: IPABS-IS (8/28/01)

PREDECISIONAL DRAFT

This map is conceptual and in many cases does not represent cleanup or transfer decisions; this map does not preclude the on-going regulatory and stakeholder decision-making processes.

Pantex HAZ Disposition Map

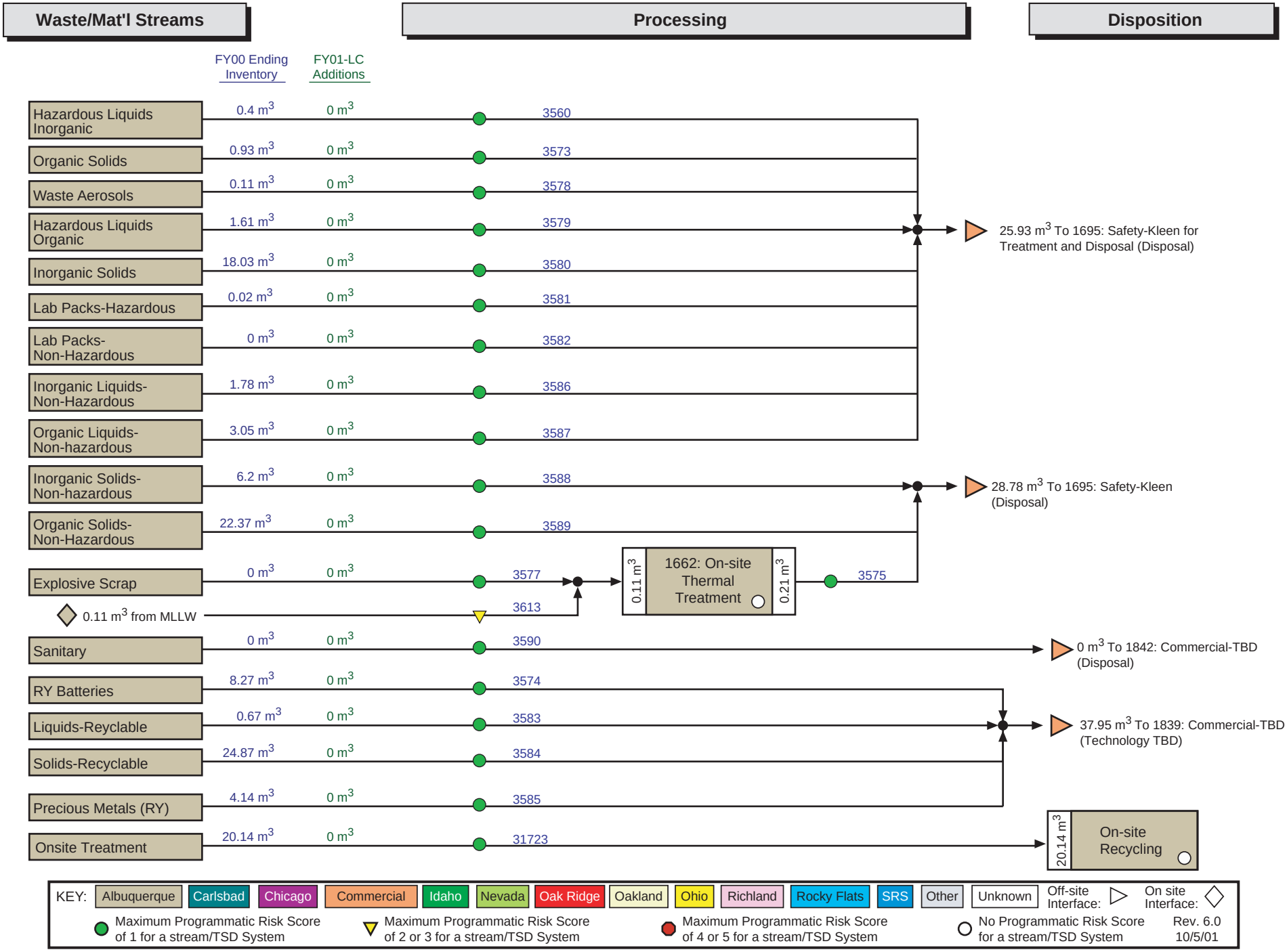

Pantex LLW Disposition Map

Dataset: IPABS-IS (8/28/01)

PREDECISIONAL DRAFT

This map is conceptual and in many cases does not represent cleanup or transfer decisions; this map does not preclude the on-going regulatory and stakeholder decision-making processes.

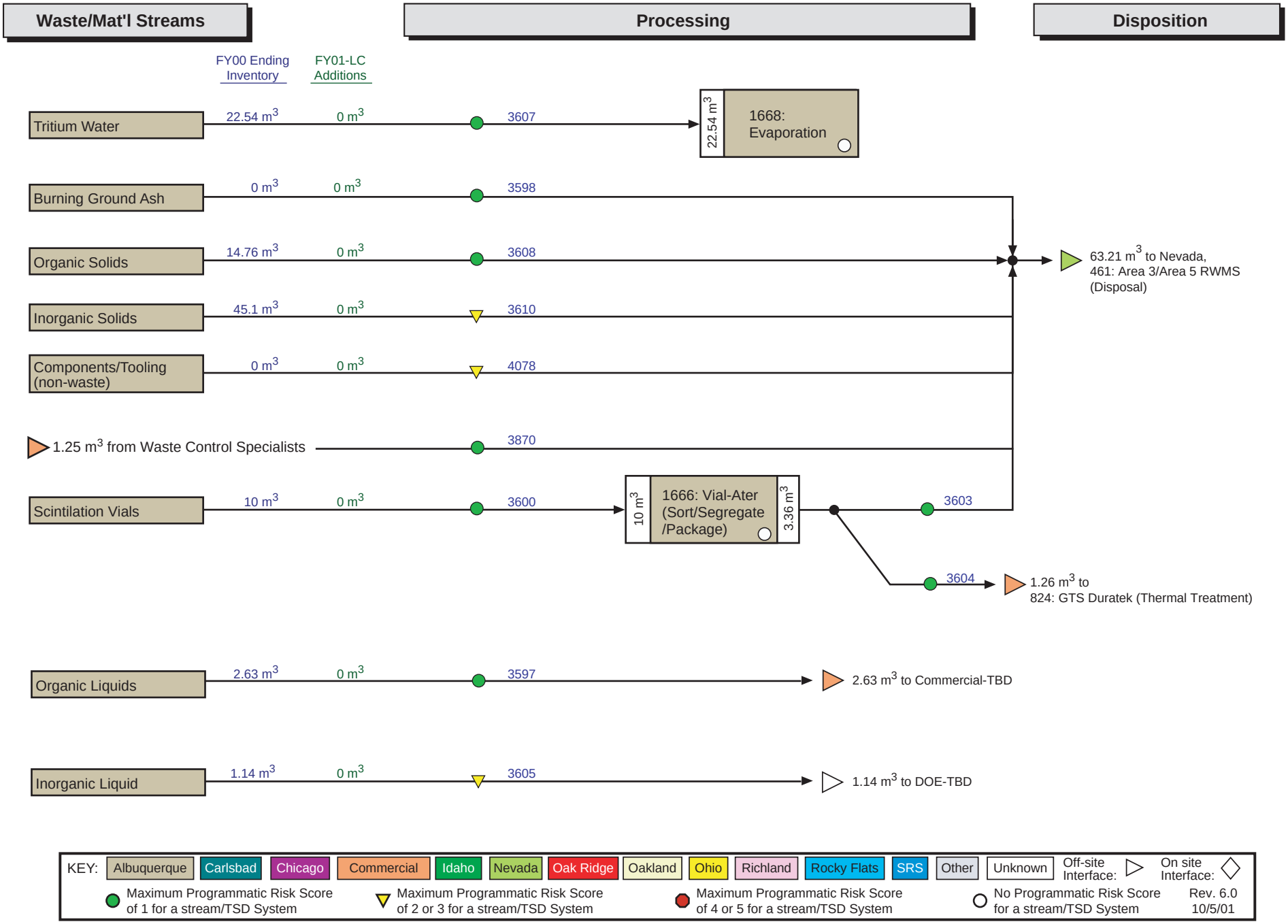

KEY: Albuquerque | Carlsbad | Chicago | Commercial | Idaho | Nevada | Oak Ridge | Oakland | Ohio | Richland | Rocky Flats | SRS | Other | Unknown | Off-site Interface: | On site Interface:

- Maximum Programmatic Risk Score of 1 for a stream/TSD System
- Maximum Programmatic Risk Score of 2 or 3 for a stream/TSD System
- Maximum Programmatic Risk Score of 4 or 5 for a stream/TSD System
- No Programmatic Risk Score for a stream/TSD System

Rev. 6.0
10/5/01

Pantex MLLW Disposition Map

Dataset: IPABS-IS (8/28/01)

PREDECISIONAL DRAFT

This map is conceptual and in many cases does not represent cleanup or transfer decisions; this map does not preclude the on-going regulatory and stakeholder decision-making processes.

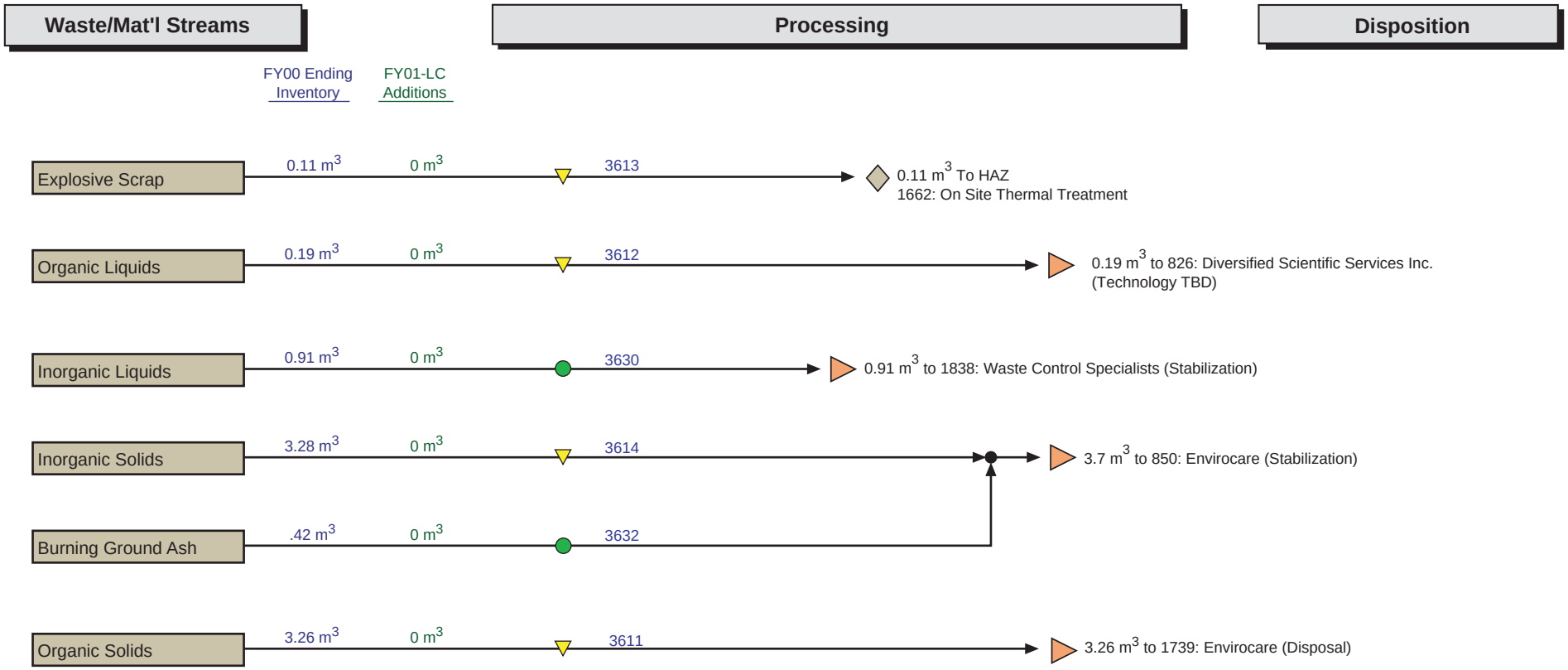

KEY: Albuquerque | Carlsbad | Chicago | Commercial | Idaho | Nevada | Oak Ridge | Oakland | Ohio | Richland | Rocky Flats | SRS | Other | Unknown | Off-site Interface: ▷ | On site Interface: ◇

● Maximum Programmatic Risk Score of 1 for a stream/TSD System

▼ Maximum Programmatic Risk Score of 2 or 3 for a stream/TSD System

⬢ Maximum Programmatic Risk Score of 4 or 5 for a stream/TSD System

○ No Programmatic Risk Score for a stream/TSD System

Rev. 6.0
10/5/01

Sandia NM ER Disposition Map

Dataset: IPABS-IS (8/28/01)

PREDECISIONAL DRAFT

This map is conceptual and in many cases does not represent cleanup or transfer decisions; this map does not preclude the on-going regulatory and stakeholder decision-making processes.

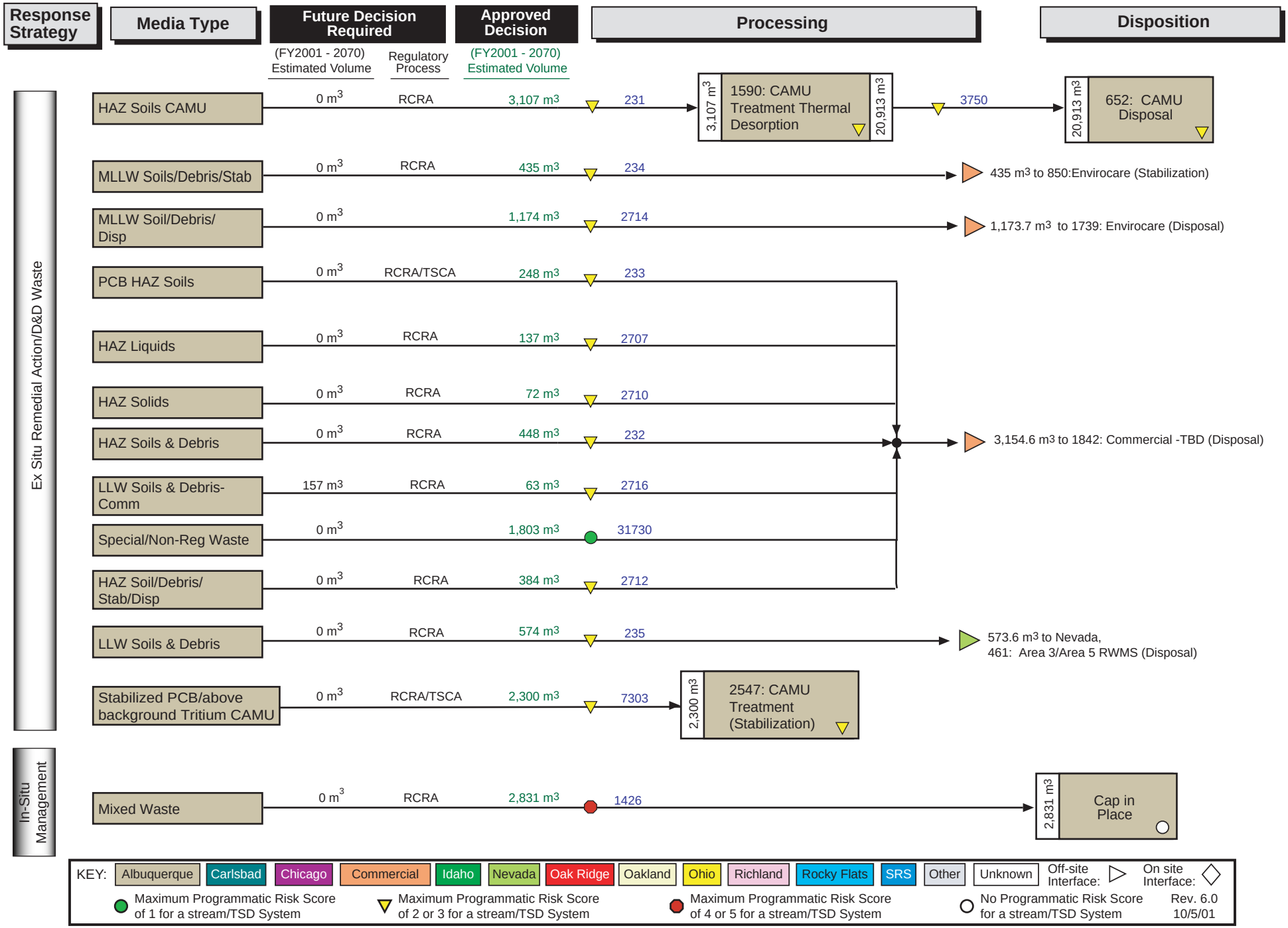

Sandia NM HAZ Disposition Map

Dataset: IPABS-IS (8/28/01)

PREDECISIONAL DRAFT

This map is conceptual and in many cases does not represent cleanup or transfer decisions; this map does not preclude the on-going regulatory and stakeholder decision-making processes.

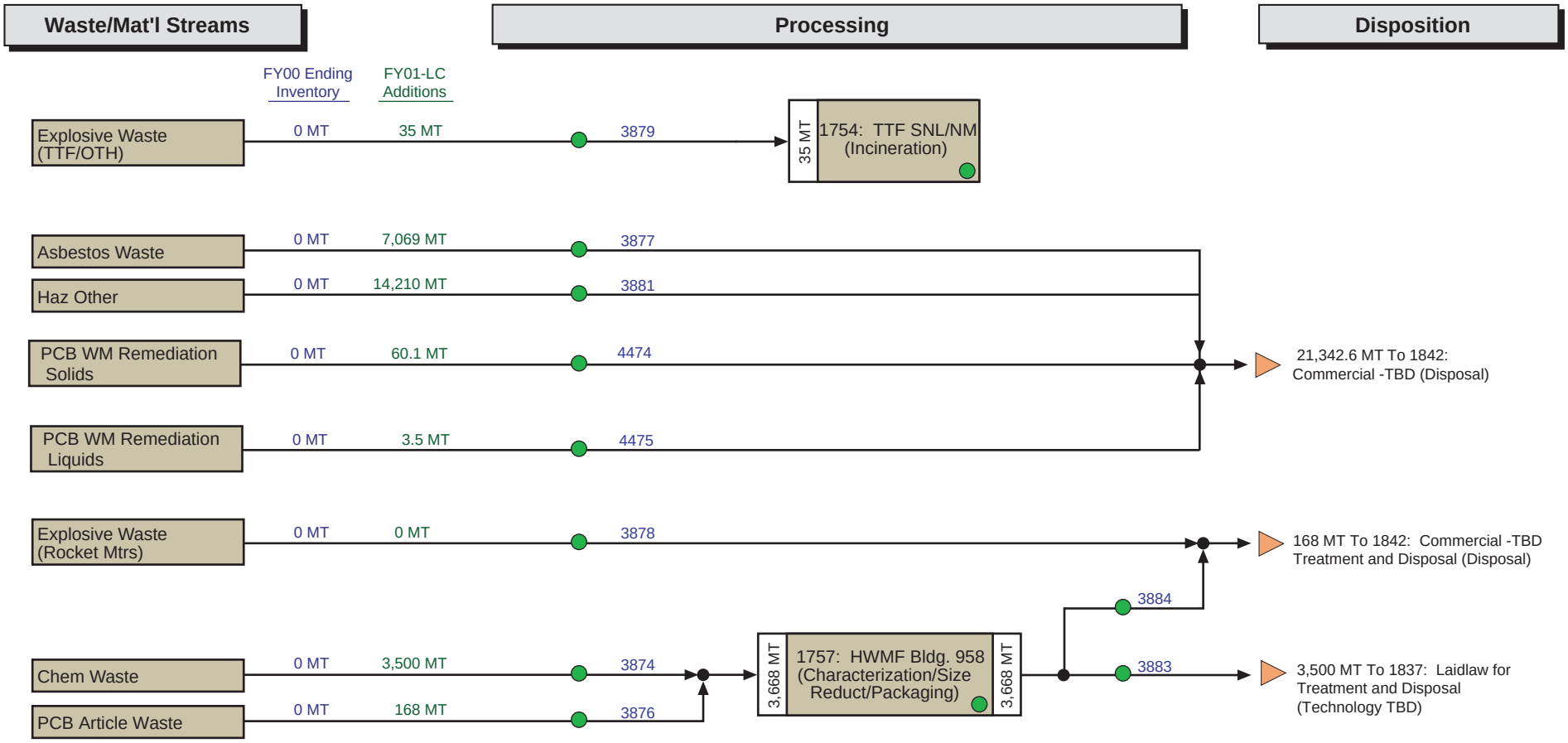

KEY: Albuquerque | Carlsbad | Chicago | Commercial | Idaho | Nevada | Oak Ridge | Oakland | Ohio | Richland | Rocky Flats | SRS | Other | Unknown | Off-site Interface: ▷ | On site Interface: ◇

● Maximum Programmatic Risk Score of 1 for a stream/TSD System

▼ Maximum Programmatic Risk Score of 2 or 3 for a stream/TSD System

● Maximum Programmatic Risk Score of 4 or 5 for a stream/TSD System

○ No Programmatic Risk Score for a stream/TSD System

Rev. 6.0
10/5/01

Sandia NM LLW Disposition Map

Dataset: IPABS-IS (8/28/01)

PREDECISIONAL DRAFT

This map is conceptual and in many cases does not represent cleanup or transfer decisions; this map does not preclude the on-going regulatory and stakeholder decision-making processes.

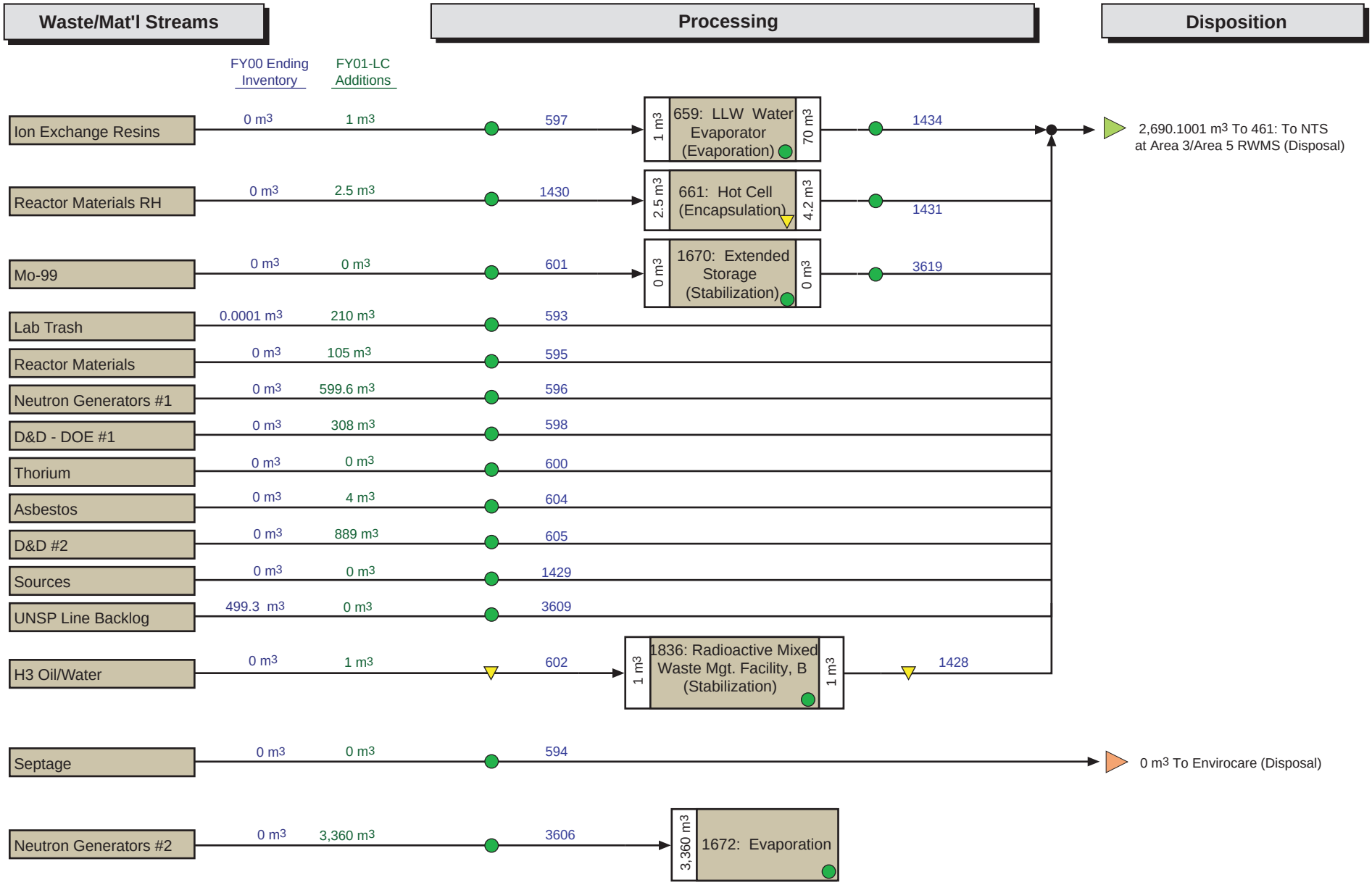

KEY: Albuquerque | Carlsbad | Chicago | Commercial | Idaho | Nevada | Oak Ridge | Oakland | Ohio | Richland | Rocky Flats | SRS | Other | Unknown | Off-site Interface: ▷ | On site Interface: ◇

● Maximum Programmatic Risk Score of 1 for a stream/TSD System

▼ Maximum Programmatic Risk Score of 2 or 3 for a stream/TSD System

● Maximum Programmatic Risk Score of 4 or 5 for a stream/TSD System

○ No Programmatic Risk Score for a stream/TSD System

Rev. 6.0
10/5/01

Sandia NM MLLW Disposition Map

Dataset: IPABS-IS (8/28/01)

PREDECISIONAL DRAFT

This map is conceptual and in many cases does not represent cleanup or transfer decisions; this map does not preclude the on-going regulatory and stakeholder decision-making processes.

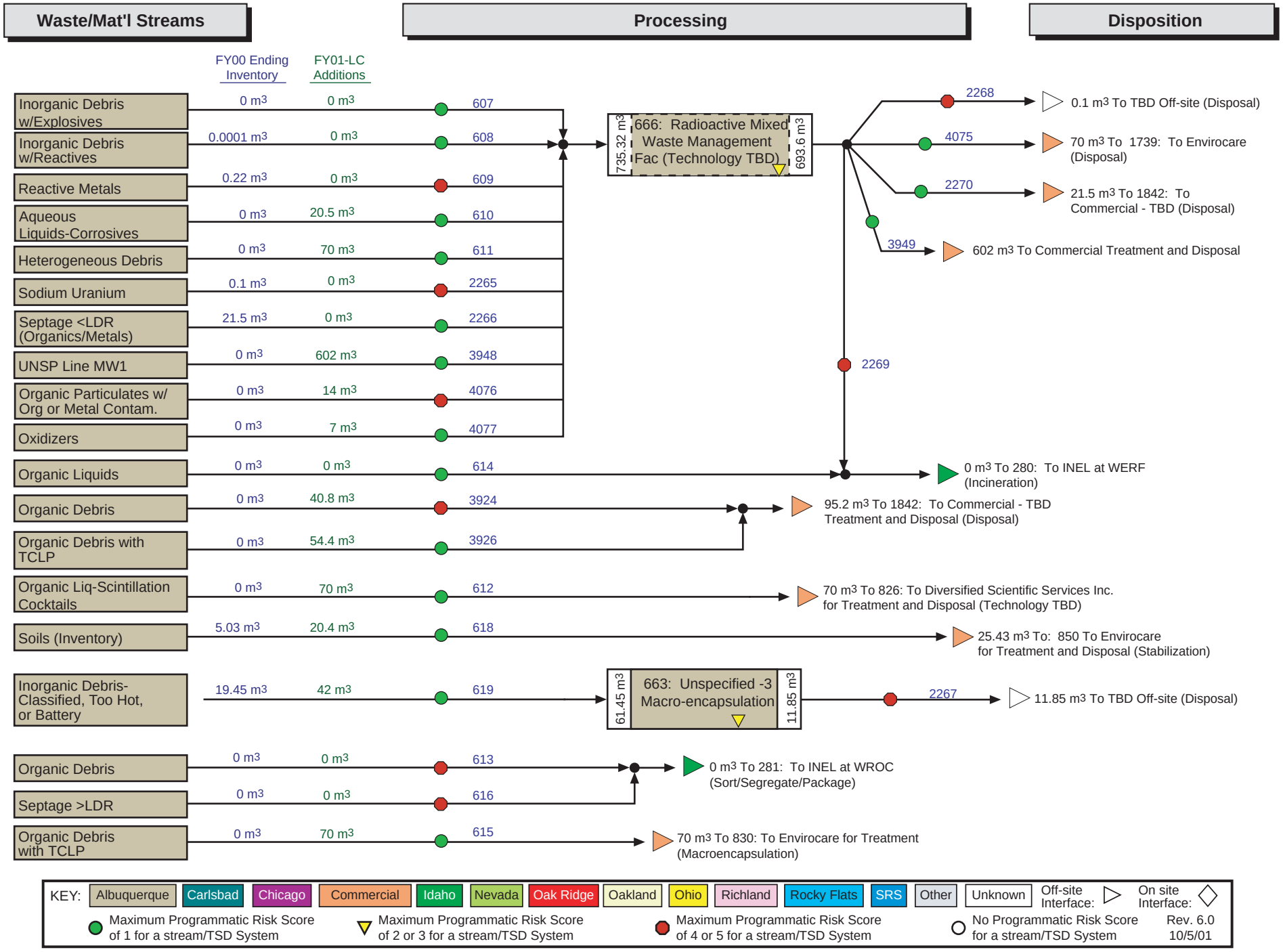

Sandia NM SNF Disposition Map

Dataset: IPABS-IS (8/28/01)

PREDECISIONAL DRAFT

This map is conceptual and in many cases does not represent cleanup or transfer decisions; this map does not preclude the on-going regulatory and stakeholder decision-making processes.

Waste/Mat'l Streams	FY00 Ending Inventory	FY01-LC Additions	Processing	Disposition
SNL SNF1 (Star Experiments/ ACRR)	0 MTHM	2.6 MTHM	30099	2.6 MTHM To 299: Shipped to INEL to Transfer to Dry Storage (TAN) (Repackaging)
SNL SNF2, Sodium Bonded (PNL Mixed Materials)	0 MTHM	0.04 MTHM	30100	0.04 MTHM To 1878: Shipped to INEL to INTEC Dry Storage (Stabilization)

KEY: Albuquerque | Carlsbad | Chicago | Commercial | Idaho | Nevada | Oak Ridge | Oakland | Ohio | Richland | Rocky Flats | SRS | Other | Unknown | Off-site Interface: ▷ | On site Interface: ◇

- Maximum Programmatic Risk Score of 1 for a stream/TSD System
- Maximum Programmatic Risk Score of 2 or 3 for a stream/TSD System
- Maximum Programmatic Risk Score of 4 or 5 for a stream/TSD System
- No Programmatic Risk Score for a stream/TSD System

Rev. 6.0
10/5/01

Sandia NM TRU Disposition Map

Dataset: IPABS-IS (8/28/01)

PREDECISIONAL DRAFT

This map is conceptual and in many cases does not represent cleanup or transfer decisions; this map does not preclude the on-going regulatory and stakeholder decision-making processes.

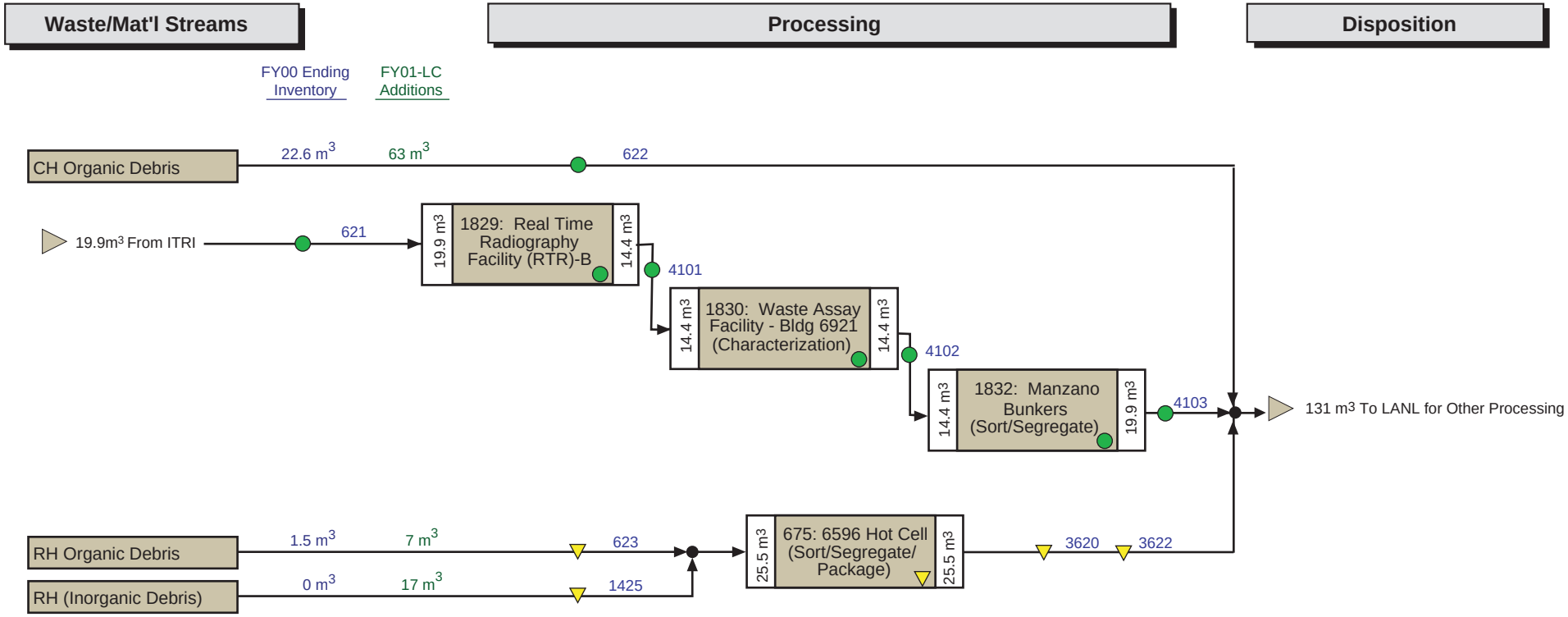

KEY: Albuquerque | Carlsbad | Chicago | Commercial | Idaho | Nevada | Oak Ridge | Oakland | Ohio | Richland | Rocky Flats | SRS | Other | Unknown | Off-site Interface: ▷ | On site Interface: ◇

● Maximum Programmatic Risk Score of 1 for a stream/TSD System

▼ Maximum Programmatic Risk Score of 2 or 3 for a stream/TSD System

● Maximum Programmatic Risk Score of 4 or 5 for a stream/TSD System

○ No Programmatic Risk Score for a stream/TSD System

Rev. 6.0
10/5/01