Practical Cost-Estimating and Validation
Lessons-Learned Workshop
Cost-Estimating Terms and Definitions

Activity A task or element of work that takes place in a specific period of time and that is required to complete a project.

Activity-Based Costing A cost estimating method utilized when the project is divided into discrete, defined activities; a cost estimate is prepared for each activity.

Activity Data Sheet The activity data sheet (ADS) Supports the Environmental Restoration Planning, Budget, and Control System and relates to the program summary work breakdown structure (WBS) at a specific level.

Administration Salaries, travel, and other expenses for the overall administration personnel (e.g., office manager) of the project. This is an indirect cost.

Allowance Additional resources included in estimates to cover the cost of known but undefined requirements for an individual activity, work item, account, or subaccount. An "estimate" allowance is an educated but somewhat arbitrary forecast of cost that is to be included in the totals in a cost estimate and is used as a basis to adjust or modify a contract if the actual cost is different than the stated allowance.

Analogy Estimate An estimate prepared by using data from a similar project. Usually a rough order-of-magnitude estimate.

As Low As reasonably Achievable (ALARA) A radiation protection principle applied to hazardous materials or radiation exposures, with costs and benefits taken into account.

Baseline A comprehensive time-phased plan consisting of assigned controlled budgets (totaling the TEC), against which contract performance is measured in dollars. The baseline is further identified as a quantitative definition of cost, schedule, and technical performance that serves as a base or standard for measurement and control during the performance of an effort; the established plan against which the status of resources and the effort of the overall program or project activities are measured, assessed, and controlled.

Benefits Personnel benefits; Social Security, worker's compensation and disability insurance, sick leave, holidays and vacation, life insurance, hospitalization programs, pension with similar benefits, etc.

Best And Final Offer (BAFO) The act of providing a revised bid based on the latest requirements and conditions of the requestor.

Budget Authority (BA) Authority provided by law to enter into financial obligations that will result in immediate or future outlays involving federal government funds. Budget authority includes the credit subbsidy cost for direct loan and loan guarantee programs but does not include authority to ensure or guarantee the repayment of indebtedness incurred by another person or government. The basic forms of budget authority include (1) appropriations, (2) borrowing authority, (3) contract authority, and (4) authority to obligate and expend offsetting receipts and collections. Budget authority may be classified by its duration (1-year, multiple-year, or no-year), by the timing of the legislation providing the authority (current or permanent), by the manner of determining the amount available (definite or indefinite), or by its availability for new obligations.

Budget Outlay (BO) The issuance of checks, disbursement of cash, or electronic transfer of funds made to liquidate a federal obligation. Outlays also occur when interest on the Treasury debt held by the public accrues and when the government issues bonds, notes, debentures, monetary credits, or other cash-equivalent instruments in order to liquidate obligations. Also, under credit reform, the credit subsidy cost is recorded as an outlay when a direct or guaranteed loan is disbursed.

Outlays during a fiscal year may be for payment of obligations incurred in prior years (prior-year obligations) or in the same year. Outlays, therefore, flow in part from unexpended balances of prior-year budgetary resources and in part from budgetary resources provided for the year in which the money is spent. Outlays are stated both gross and net of offsetting collections.

Buried Contingency Contingency funds hidden in the estimate for various reasons, including to protect against deletion by others. Hiding or concealing contingency in a cost estimate is a form of deceit and is a practice that is expressly discouraged.

CAD Services Professional drawings and plans generated by computer-aided drafting and design (CAD) systems.

Change Control The specified procedures that must be followed to change the baseline estimate. Any impacts to any elements of the baseline scope, cost, and/or schedule are identified as changes to the baseline and are processed through a highly structured and specific procedure called change control.

Check Estimate A second estimate normally prepared by a source that is independent of the original source, using identical information and scope as provided to the original source, and used to verify the validity of the first estimate. Occasionally, the original source should develop a second estimate using different methodology to serve as a sanity check against the original estimate.

Code of Accounts Coordination and structure for construction cost accounting based on an interrelationship of place, trade, function, or material.

A Code of Accounts is designed to be a sequentially structured collection of costs used within a specific business entity or site-specific in performance measurement systems for comparison of the planned elements of cost contained in the estimate against the final actual costs incurred for

identical activities. The Code of Accounts greatly facilitates an equalized comparison for planned costs against actual costs.

The Code of Accounts also provides a common structure for cost collection in a database format for use in developing future estimates for other similar activities or elements of cost that are unique to a specific site or business entity.

Composite Price Index An index that globally measures the price change of a range of commodities. Comprehensive Environmental Response, Compensation, and Liability Act (CERCLA) Federal statue (also known as Superfund) enacted in 1980 and reauthorized in 1986, that provides the statutory authority for cleanup of hazardous substances that could endanger public health, welfare, or the environment.

Conceptual Design Estimate (also called a conceptual estimate) An estimate prepared from early or initial designs or program source documents. A conceptual estimate is utilized to develop project or program funding requirements.

Conceptual Design Report The CDR is a document that describes the project in sufficient detail to produce a budget cost estimate and to evaluate the merits of the project. A conceptual design report shall be prepared for line construction projects prior to inclusion of the project in the DOE budget process.

Contingency An amount designated to cover unrecognized future changes that may result from incomplete design, unforeseen and unpredictable conditions, or uncertainties. The amount of the contingency will depend on the status of the design, procurement, construction, and the complexity and uncertainty of the component parts of the project. Contingency is not to be used to avoid making an accurate assessment of expected costs.

Construction Equipment Costs associated with direct purchase or rental of major tools and equipment that are not normally supplied by the craftsmen but necessary to perform construction activities in the fulfillment of contractual obligations, as established by industry standards using the most cost-efficient methods reasonably available.

Construction Equipment Maintenance Costs to maintain and/or store major pieces of equipment or tools used during construction.

Construction Facilities Temporary structures, enclosures, buildings, roads, site accessibility applications, and other costs required to support the performance of the project activities. Temporary construction facilities include temporary toilet facilities/treatment plants, temporary walkways, temporary office trailers/structures, changing rooms, contamination huts/tents, asbestos containments, special shipment rail-lines, temporary warehousing, tool sheds, guard shacks, and any other supportive structures or utilities necessary for the completion of the project. Construction facilities shall consist only of facilities both erected/installed and removed during the duration of the project and must be itemized in the estimate.

Facilities that remain in place or use after completion of construction are not considered construction facilities (e.g., permanent plant construction, site work, operating expense).

Consumables Expendable supplies and materials used during construction. Includes utilities, fuels and lubricants, welding supplies, workers' supplies, medical supplies, rope, tarps, drill bits, grinding wheels, gloves, hoses, rags, and soap.

Contingency An amount added to the estimate to allow for the unforeseen that experience shows will likely be required. This may be derived either through statistical analysis of past project costs or by applying experience gained on similar projects. Contingency does not include changes in scope or unforeseeable major events, such as strikes or earthquakes.

A quantified risk analysis aid can be used in developing and assessing contingency, through a factored adjustment, to determine additional costs that may result from incomplete design, unforeseeable impacts to cost, and unpredictable conditions or uncertainties within the defined scope or project. The amount of the contingency will depend on the status of design, procurement, and construction and the complexity and uncertainty of the component parts of the project. Contingency should not be used to avoid making an accurate assessment of expected cost.

Appropriate application of contingency is particularly important when previous experience relating estimates and actual costs have shown that unforeseeable events that will increase costs are likely to occur.

For estimating purposes, contingency includes management reserve budgets unless specifically noted otherwise in the project estimate. Contingency may include costs for escalation but must be noted to all affected project team participants and documented accordingly.

Contract A legally binding enforceable agreement, written or verbal, between two or more parties. Following are descriptions of several types of contracts used in construction:

- **Fixed Price** Fixed-price contracts are ones wherein a contractor agrees to furnish services and material at a specified price, possibly with a mutually agreed-upon escalation clause. This type of contract is most often employed when the scope of services to be provided is well defined.

- **Fixed Price–Lump Sum:** The contractor agrees to perform all services as specified by the contract for a fixed amount. A variation of this type may include a turnkey arrangement where the contractor guarantees quality, quantity, and yield on a process plant or other installation.

- **Unit Price:** The contractor will be paid at an agreed-upon unit rate for services performed. For example, technical work-hours will be paid for at the unit price agreed upon. Often fieldwork is assigned to a subcontractor by the prime contractor on a unit price basis.

Cost (Control) Account The account at the lowest level of the project's work breakdown structure for which individual costs are summarized and accounted.

S **Cost Reimbursement** In cost-plus contracts, the contractor agrees to furnish to the client services and material at actual cost, plus an agreed-upon fee for these services. This type

of contract is employed most often when the scope of services to be provided is not well defined.

- **Cost Plus Fixed Fee:** The client pays costs as defined in the contract document. Burden on reimbursable technical labor cost is considered, in this case, part of cost. In addition to the costs and burden, the client also pays a fixed amount as the contractor's "fee."

- **Cost Plus Fixed Sum:** The client will pay costs defined by contract plus a fixed sum that will cover "nonreimbursable" costs and provide for a fee. This type of contract is used in lieu of a cost-plus-fixed-fee contract where the client wishes to have the contractor assume some cost plus percentage fee of the risk for items that would be reimbursable under a cost-plus-fixed-fee contract.

- **Cost Plus Percentage Burden and Fee:** The client will pay all costs as defined in the terms of the contract plus "burden and fee" at a specified percent of the labor costs that the client is paying for directly. This type of contract generally is used for engineering services. In contracts with some governmental agencies, burden items are included in indirect cost.

- **Cost Plus Percentage Fee:** The client pays all costs plus a percentage for the use of the contractor's organization.

- **Guarantee and Target Price/Guaranteed Maximum or Target Price** A contractor agrees to perform all services as defined in the contract document guaranteeing that the total cost to the client will not exceed a stipulated maximum figure. Quite often, these types of contracts will contain special share-of-the-savings arrangements to provide incentive to the contractor to minimize costs below the stipulated maximum.

- **Incentivized/Cost Plus Award Fee or Cost Plus Incentive Fee** A special contractual arrangement usually between a client and a contractor wherein the contractor is guaranteed a bonus (fee), usually a fixed or percentage sum of money, for completion of the project ahead of a specified schedule and/or below a specified cost.

Contract Price The monies payable by the owner to the contractor under the contract documents as stated in the agreement.

Cost Estimate A report intended to be a reliable and dependable forecast of costs that are expected to be incurred during the performance of an activity, such as a project or program.

Cost Estimation The determination of quantity and the predicting or forecasting, within a defined scope, of the costs required to construct and equip a facility, to manufacture goods, or to furnish a service. Costs are determined utilizing experience and calculating and forecasting the future cost of resources, methods, and management within a scheduled time frame. Included in these costs are assessments and an evaluation of risks and uncertainties. Cost estimation provides a basis for feasibility studies, business planning, budget preparation, and cost and schedule control.

Cost Index (Price Index) A number that relates the cost of an item at a specific time to the corresponding cost at some arbitrarily specified time in the past. A cost index is useful in taking known past costs for an item and relating them to the present.

Critical Decision A formal determination at a specific point in a project that allows the project to proceed. Critical decisions occur in the course of a project, for example: prior to commencement of conceptual design, commencement of execution and prior to turnover.

Current Dollars Dollars of purchasing power in which actual prices are stated, including inflation or deflation. In the absence of inflation or deflation, current dollars equal constant dollars.

Davis-Bacon Wage Rates Wage rates issued and administered as a result of the Davis-Bacon Act, usually performed by state agencies that regulate the minimum wage rates paid to employees on federally funded projects. These are the minimum wage rates allowable on federally funded projects and quite often are the same as the local union rates.

Decommissioning The process of removing a facility from operation, followed by decontamination, entombment, dismantlement, or conversion to another use.

Decontamination The removal of hazardous material (typically radioactive or chemical material) from facilities, soils, or equipment by washing, chemical action, mechanical cleaning, or other techniques.

Deliverable A report or product of one or more tasks that satisfies one or more objectives and must be delivered to satisfy contractual requirements.

Definitive Estimate An estimate conducted during the latter stages of a project when engineering may be as much as 90% complete. The actual cost should ultimately be within plus 10% to minus 5% of the definitive estimate.

Depreciation (1) Decline in value of a capitalized asset; (2) A form of capital recovery applicable to a property with a life span of more than 1 year, in which an appropriate portion of the asset's value is periodically charged to current operations.

Detailed Estimate This estimate is developed for the total project based on the completed design package. This estimate is used to verify the contractor's figures in both a lump sum or negotiated fee project. It is also used to track costs during the construction phase of the contract.

Direct Costs Any cost that can be specifically identified with a particular activity, project, or program including wages, salaries, travel, equipment, materials, and supplies directly benefitting the project or activity. The direct costs include all costs identified as direct materials, direct labor, and direct expenses. In manufacturing, service, and other nonconstruction industries, direct costs include the portion of operating costs that are generally assignable to a specific product or process area, including such items as input materials, payroll, and benefits, maintenance, utilities, chemicals and operating supplies, royalties, services, and packaging.

Direct Expense All items of expense directly incurred by or attributable to a specific project. Direct expenses include the costs of furnishing, using, and maintaining construction and other project-specific equipment. Direct expenses also include costs associated with general site conditions, temporary construction, permits, fees, subcontractor costs, and all site-specific construction service support contracts and activities. Other types of direct expenses are those costs included in the estimate for insurance, escalation, and contingency, as is readily allocable to a specific site.

Direct expenses are usually associated with a specific site and are generally not applied as costs against other sites or independent geographical locations.

Direct Labor Those elements of cost that define or make up the detail of the estimated project labor. The direct cost includes only non-indirect specific-task-oriented direct labor costs for temporary or permanent construction activities. Direct labor includes costs of base wage rates, estimated wage rates, project staffing salaries, direct field supervision adjustments to the craftsmen wage rates, crew mixes, project-specific factors and adjustments to the estimated labor costs, labor burden and fringe, and craft support. Project staffing includes program and project management, design, and all construction management teams and support personnel.

Direct Materials Those elements of cost that define or make up the detail of the estimated project materials. The direct cost includes only specific material costs exclusive of markups. Direct material costs include specific material products furnished with the intent of being temporarily or permanently incorporated into the project facilities or structures and any associated taxes or delivery and unloading costs.

Disposal The process used to document, physically remove from a site, relocate to a permanent or interim storage location, including the permanent transfer of ownership or the disposed items.

Element of Cost The individual components or parts of the estimate that when added together comprise the total estimated cost. An element of cost is an individual itemized line item documented in the project estimate and consists of cost-specific, itemized, direct-cost items or associated itemized markups.

An element of cost usually contains costs broken down by material, labor, and construction equipment. Elements of cost are defined more extensively than are unit rates.

Engineering, Design, and Inspection (ED&I) The design phase of a project or program supporting construction activities including construction modifications and inspections, that occur after the design is essentially complete and ready for construction (field) use. ED&I cost estimates consist more specifically of the design overview and management activities as identified in a task analysis prepared by engineering staff to provide design service contractor overview, project engineering management, functional design reviews, and technical and administrative function.

Environmental, Safety and Health (ES&H) An organization that is responsible to identify general and project specific regulatory requirements and responsible to fully implement those environmental, safety, and health regulations or requirements.

Escalation The provision in estimated costs for an increase in costs due to continuing price-level changes over time.

Escalation is an increase in the amount of labor hours required to produce a given unit of work output, aggregate demand exceeding aggregate supply, external pressures on the market such as droughts or cartels, wage-price spiral, an increase in the cost of labor, the costs of living, or a decrease in the availability of goods or services. These factors independently or in unison can impact the cost of all goods or services.

The elements of cost should not contain escalation at the detail level unless specifically noted in the estimate item. Escalation should be applied to labor costs at a different (lower) rate than the rate applied to material costs if the labor rates are more current than material prices.

Estimate, Cost An evaluation of all the costs of the elements of a project or effort as defined by an agreed-upon scope. Three specific types of estimates based on degree of definition are as follows:

1. **Order-of-Magnitude Estimate**—an estimate made without detailed engineering data. Some examples are an estimate from cost capacity curves, an estimate using scale-up or -down factors, and an approximate ratio estimate. It is normally expected that an estimate of this type would be accurate within plus 50% to minus 30%.

2. **Budget Estimate**—budget in this case applies to the owner's budget and not to the budget as a project control document. A budget estimate is prepared with the use of flow sheets, layouts, and equipment details. An estimate of this type would normally be accurate within plus 30% to minus 15%.

3. **Definitive Estimate**—as the name implies, an estimate prepared from very defined engineering data. The engineering data include, as a minimum, nearly complete plot plans and elevations, piping and instrument diagrams, one-line electrical diagrams, equipment data sheets and quotations, structural sketches, soil data and sketches of major foundations, building sketches, and a complete set of specifications. The maximum definitive estimate is derived from "approved for construction" drawings and specifications. An estimate of this type would normally be accurate within plus 15% to minus 5%.

Estimate Basis Document A document that states the specific information and assumptions used in the development of the project estimate. Every project estimate should be issued collectively with the estimate basis document.

Estimate At Complete A value developed to represent a realistic appraisal of the final cost of a task when accomplished. It is the sum of actual costs-to-date plus the estimate of costs for work remaining (EAC).

Estimate to Complete An estimate of costs for the sum of the remaining activities or portions of the project not yet completed. The ETC does not contain any actual costs incurred already for the project.

Estimating Methodology A body of methods, rules, and procedures employed for analysis and development of cost estimates.

Exclusions Those items mentioned or noted in the supporting project documents but **not** contained in the project estimate. All exclusions are labeled and itemized in the estimate basis document.

Exempt Employees exempt from federal wage and hours guidelines.

Feasibility Study The objectives of the feasibility study are to identify the alternatives for remediation and to select and describe the alternative that satisfies the applicable or relevant and appropriate requirements for mitigating confirmed environmental contamination. Successful completion of the feasibility study should result in the development of a remedial design to implement the selected remedial actions.

Fee A term used to denote payment for professional ability, capability, and availability of an organization and its resources, excluding compensation for direct, indirect, and/or reimbursable expenses. Fee sometimes denotes compensation of any kind, whether in monetary form or not, for services rendered. Fee should be considered by the estimator as synonymous with profit.

Fee is the most negotiable portion of a construction contract. The level of fee is dependent on the amount of cash the contractor must invest in the project (nearly every project or program requires a cash investment by the contractor), the cost of money, resources available to perform the work, the current workload and backlog (supply and demand), and the risks that are imposed on the contractor. Fees can range from 100% for highly technical government service contracts to 0% for a contractor that has zero risk and investment. Normal commercial business profit margins are close to 10% but are more generally based on a return-on-investment for the contractor.

Field Costs Indirect costs of engineering and construction associated with the project's field site rather than with the home office.

Field Labor Overhead The sum of the cost of payroll burden, temporary construction facilities, consumables, field supervision, and construction tools and equipment.

Fixed Cost Those costs independent of short-term variations in output of the system under consideration. Includes such costs as maintenance; plant overhead; and administrative, selling, and research expense. For the purpose of cash flow calculation, depreciation is excluded (except in income tax calculations).

Forecast An estimate and prediction of future conditions and events based on information and knowledge available at the time of the forecast.

Fringe Benefits Employee welfare benefits (e.g., expenses of employment such as holidays, sick leave, health and welfare benefits, retirement fund, training, and supplemental union benefits).

Full Time Equivalents (FTE) A cost or method of identifying units of labor relative to hours. An FTE is the cost that would be incurred for a full year of time of one employee calculated at an average of 52 weeks per year at 40 hours per week, less allowable vacation, holiday, sick leave, and/or all leaves of absence when the employee receives compensation benefits. An industry accepted standard is 1,872 hours per year.

Future Dollars The value of some amount of money at some point in the future.

General & Administrative (G&A) See Indirect Costs

General Conditions The project-specific site costs consisting of temporary construction, nonmanual field supervision staffing, hot and cold weather protection, permits, and other costs that may be required by the general and special site conditions.

General Overhead The fixed cost in operation of a business. General overhead is also associated with office, plant, equipment, and staffing (and expenses thereof) maintained by a contractor for general business operations. The costs of general overhead are not specifically applicable to any given job or project. (See **Overhead**.)

General Requirements Distributables and field costs.

Government Cost Estimate A government estimate is most frequently used to determine the reasonableness of competitive bids received in connection with fixed-price construction contracts and serves as a control in evaluating cost estimates prepared by a prime cost-type construction contractor.

HTRW Sites Projects sites that have been designated in a joint effort by several federal agencies and are determined to contain Hazardous, Toxic, or Radioactive Wastes.

Independent Cost Estimate A documented cost estimate that has the express purpose of serving as an analytical tool to validate, cross check, or analyze estimates developed by proponents of a project. An independent cost estimate also serves as a basis for verifying risk assessments.

Indirect Costs Incurred by an organization for common or joint objectives and that cannot be reasonably identified or allocated specifically with a particular activity or project. Indirect costs are generally considered to be those costs that are not incurred at any specific site but are incurred against several independent geographic locations.

In an activity-based cost estimate that is based on a performance measurement system, **all** costs should be considered **direct** costs unless it is not feasible to allocate to a specific project/program, or if a reasonable basis cannot be developed to consistently allocate certain costs to a specific project/program.

Indirect costs include all overhead expenses; expenses indirectly incurred and not directly chargeable to a specific project or task, including general and administrative expenses that are

applied uniformly to all projects or programs. Examples of indirect costs may include professional and contractors' licenses, human resources, janitorial staff, rent, maintenance, business supplies, general liability/comprehensive insurance coverage, and any other expenses not incurred as a result of a specific project.

An accumulation of indirect costs can be recovered through the application of specified and agreed overhead rates. The overhead rate should be applied uniformly as a percentage factor of the total dollars or may be applied as a lump sum dollar amount if noted accordingly in the estimate basis document.

Escalation and contingency should be itemized separately and, therefore, should not be included or built into the project overhead.

Job Conditions Factors The application of various factors deviating from and adjusting the standardized labor productivity factors. Job conditions factors should include factors for congestion, potential for exposure to friable asbestos, weather conditions for outdoor work, or other project-specific estimating factors.

Job conditions adjustment or factors should be applied as a percentage factor used to decrease or increase the standard labor productivity factor.

Job Overhead The expense of such items as trailers, toilets, telephone, superintendent, transportation, temporary heat, testing, power, water, cleanup, and similar items possibly including bond and insurance associated with the particular project.

Labor Burden Costs for worker's compensation insurance, employer-paid Social Security tax, state and federal unemployment insurance, union and/or company fringe benefits, and subsistence. (see also "Labor Fringes & Payroll Taxes")

Labor Cost The base salary and labor burden costs associated with labor that can be definitely assigned to one item of work, product, process area, or cost center.

Labor Fringes & Payroll Taxes (also known as labor burden) The costs associated with craft (manual labor/workers) for health and welfare, pension, Social Security and Medicare, state unemployment insurance, federal unemployment insurance, and worker's compensation as required by law.

Labor (Wage) Rates The cost associated with the appropriate hourly wage rate for the (non manual/professional) staff or (manual labor) craftsman/worker planned to perform a task and should be expressed in terms of a monetary cost per hour. The labor rate is only a representation of the average rate for the identified position of employment intended to accomplish the task. All craft rates used in the estimate shall be as provided in the current issue of the Davis-Bacon General Decision and weighed as a percentage of a total crew effort.

Labor rates must include costs, when specifically required employer policy, for allowances such as educational advancement, hardship, cost of living differential, relocation, and subsistence. These costs should be included as a percentage of wage rates based on project-specific

conditions or based on past practices of the employer. Labor rates should not automatically include (without basis) any costs for special pay, retroactive pay, severance pay, overtime, or premium pay, unless specifically noted otherwise in the estimate.

Escalation and contingency must be itemized separately and not be included or built into the labor rate.

Learning Curve A planning technique particularly useful in project-oriented industries where new products are frequently phased in. The basis for the learning curve calculation and graphic representation is the demonstration that workers will be able to produce the product more quickly after they get used to making it. The learning curve is presented as a graphic representation of the progress in production effectiveness as time passes.

Level of Effort Support effort (e.g., vendor liaison) that does not readily lend itself to measurement of discrete accomplishment. It is generally characterized by a uniform rate of activity over a specific period of time.

Life-Cycle Cost An economic assessment of an item, area, system, or facility that considers all the significant costs of ownership over its entire economic life and is expressed in terms of equivalent dollars. Life-cycle costing includes elements of cost, when applicable, for investment costs (return on investment), escalation, operations, maintenance, spare parts, energy use, salvage value, tax elements, alteration/demolition/replacement costs, and other costs.

Life-cycle cost is the sum total of all direct, indirect, recurring, nonrecurring, and other related costs incurred or estimated to be incurred in the design, development, production, operation, maintenance, support, and final disposition of a major system over its anticipated useful life span.

Refurbishment and restoration costs should be included in a life-cycle cost estimate if existing sites or facilities are used. For further information concerning life-cycle costing, refer to American Society for Testing and Materials (ASTM) guides E 1185-87 and E 1369-90; ASTM practices E 917-89, E 984-89, E 1057-85, E 1074-91, and E 1121-86; and ASTM terminology E833-91a.

Life-Cycle Cost Analysis An analysis of the direct, indirect, recurring, nonrecurring, and other related costs incurred or estimated to be incurred in the design, development, production, operation, maintenance, support, and final disposition of a major system over its anticipated useful life span.

Location Factor An estimating factor used to convert the cost of an identical plant from one location to another. This factor takes into consideration the impact of climatic conditions, local infrastructure, local soil conditions, safety and environmental regulations, taxation and insurance regulations, labor availability, and productivity.

Lump Sum The complete in-place cost of a system, a subsystem, a particular item, or an entire project. Lump-sum contracts imply that no additional charges or costs will be assessed against the owner.

Maintenance The cost for labor and materials that may be necessary to maintain equipment or

other installations in suitably operable condition. Life cycle costs include maintenance costs for items that cannot be expended within the year purchased and that are considered to be fixed capital items.

Market Value The monetary price upon which a willing buyer and a willing seller in a free market will agree to exchange ownership, both parties knowing all the material facts but neither being compelled to act. The market value fluctuates with the degree of willingness of the buyer and seller and with the conditions of the sale. The use of the term “market” suggests the idea of barter. When numerous sales occur on the market, the result is to establish fairly definite market prices as the basis of exchanges.

Markup As variously used in construction estimating, such percentage applications as general overhead, profit, and other indirect costs. When markup is applied to the bottom of a bid sheet for a particular item, system, or other construction price, any or all of these indirect costs may be included, depending on local practice.

Material Cost The cost of everything of a substantial nature that is essential to the construction or operation of a facility, of both a direct and an indirect nature. Generally includes all manufactured equipment as a basic part.

Milestone An important or critical event and/or activity that must occur in the project cycle to achieve the project's objective(s).

Most Likely (Time) Estimate The most realistic estimate of the time an activity might consume.

National Environmental Policy Act (NEPA) of 1969 This act established the requirement for conducting environmental reviews of federally funded projects or programs that may adversely impact the human environment. NEPA requires that federal agencies perform an environment review, with public participation, of any proposed major federal actions that may have an impact on the human environment. This review usually results in an Environmental Assessment (EA) or Environmental Impact Statement (EIS). NEPA costs must be forecasted, assessed, and included in the total project cost (TPC) for each specific EA and EIS performed.

Nonexempt Employees not exempt from federal wage and hours guidelines.

Operating Cost The expenses incurred during the normal operation of a facility, or component, including labor, materials, utilities, and other related costs. Includes all fuel, lubricants, and normally scheduled part changes in order to keep a subsystem, system, particular item, or entire project functioning. Operating costs may also include general building maintenance, cleaning services, taxes, and similar items.

Operations and Maintenance Costs associated with the activities required to maintain the effectiveness of response actions will be considered life-cycle costs.

Optimistic (Time) Estimate The minimum time in which the activity can be completed if everything goes exceptionally well. It is generally held that an activity would have no more than one chance in a hundred of being completed within this time.

Order-of-Magnitude Estimate A methodology used to develop a cost estimate for use in comparing estimates at varying stages of a project or program. The function of an order-of-magnitude estimate is usually to determine the feasibility of proceeding with a certain project or to evaluate alternative designs.

Other Direct Costs (ODCs) All costs incurred in a project that are contained in the total estimated cost and are not contained elsewhere in the work breakdown structure.

Other Project Costs (OPCs) All costs related to a project that are not included in the Total Estimated Costs, such as supporting research and development, pre-authorization costs prior to start of design, environmental documentation and permits prior to design, plant support costs during construction, activation, facility or process start up and training, one-time costs, and spare parts.

Overhead A cost or expense inherent in performing an operation (i.e., engineering, construction, operating, or manufacturing) that cannot be charged to (or identified with) a part of the work, product, or asset and which, therefore, must either be allocated on some arbitrary basis believed to be equitable, or handled as a business expense independent of the volume of production.

Parametric Estimate A methodology used to develop an estimate that is based on elements of cost extracted or gleaned from historical data acquired from similar systems or subsystems. Statistical analysis is performed on the historical data to find correlations between cost drivers and other system parameters, such as design or performance. The analysis produces cost equations or cost estimating relationships that can be used individually as elements of cost or grouped into more complex models representing units of cost.

Payroll Burden (also referred to as labor burden) Includes all payroll taxes, payroll insurance, fringe benefits, and living and transportation allowances.

Performance Baseline The time-phased budget plan against which performance is measured. It is formed by the budgets assigned to scheduled work elements and the applicable indirect budgets.

Personal Protective Equipment (PPE) Costs incurred for protective gear and personal equipment provided for and on behalf of each worker assigned hazardous duties or work in hazardous conditions.

Pessimistic (Time) Estimate The maximum time required for an activity under adverse conditions. It is generally held that an activity would have no more than one chance in a hundred of exceeding this amount of time.

Planning Estimate A type of cost estimate utilized for only feasibility planning and budgeting purposes. Planning estimates are developed for each project or program and are utilized to initiate a specific technical direction or design for a project.

Plant and Capital Equipment (PACE) Fund For conventional construction projects, this is a fund which provides for the plant and its basic equipment/furnishings.

Preliminary Assessment/Site Investigation (PA/SI) One of the first steps in remediating a site. The PA/SI is designed to evaluate all known information about the site and to conduct a preliminary investigation of the extent and nature of the contamination at the site. The purpose is to determine if further action or investigation is appropriate.

Preliminary Estimate The cost estimate for major projects must be prepared in several steps by the estimator. The first run through an estimate can many times be a “quick-and-dirty” estimate utilized by a senior-level professional estimator to determine the “general direction” or status of the development of a cost estimate.

The preliminary estimate is thought of in terms of the development level of an estimate and should not be confused with an estimate based on the level of design. A preliminary estimate can be performed at any level of design and is the “first cut” of any type of estimate that precedes the draft version or final version of the estimate.

Preliminary Safety Analysis Report (PSAR) For most major projects above $50 million, a preliminary safety analysis report is prepared and approved before construction starts. The PSAR is used to identify and analyze potential project safety concerns and impose safety requirements.

Price The amount of money asked or given for a product (i.e., the exchange value). The chief function of price is to ration the existing supply among prospective buyers. Price incorporates direct costs, indirect costs, general overhead, profit, and contingency.

Pricing The observation and recording (collecting) of prices of commodities.

Productivity A relative measure of labor efficiency, either good or bad, when compared to an established base or norm as determined from an area of great experience. Alternatively, productivity is defined as the reciprocal of the labor factor.

Program An organized set of activities directed toward a common purpose or goal and undertaken or proposed to support an assigned mission area. A program is characterized by a strategy for accomplishing a definite objective(s), which identifies the means of accomplishment, particularly in quantitative terms, with respect to manpower, material, and facilities requirements. Programs are typically made up of technology base activities, projects, and supporting operations.

Program Management Headquarters functions that include planning and developing the overall program; establishing broad priorities; providing program direction; preparing and defending the

budget; controlling DOE Headquarters-level milestones; integrating all components of the program; providing public and private sector policy liaison; expediting Headquarters interface activities and follow-up actions; and retaining overall accountability for program success. Field functions include implementing these program activities, controlling field-level milestones, and providing major support to the Headquarters programming and budget processes. Management responsibility and authority for specific projects will normally be delegated by the Cognizant Secretarial Officer.

Program Manager An individual in an organization or activity who is responsible for management of a specific function or functions related to program management.

Project A unique effort within a program that has firmly scheduled beginning, intermediate, and ending date milestones; prescribed performance requirements; prescribed costs; and intense management, planning, and control. The project is the basic building block in relation to a program that is individually planned, approved, and managed.

Project Closeout The final phase of a project where all project contracts are closed and all records are finalized for storage and eventual retrieval by the Internal Revenue Service.

Project Cost Total cost of the project, including construction cost, professional compensation, land costs, furnishings and equipment, financing, and other charges.

Project Management Plan (PMP) The Project Management Plan is the document which sets forth the plans, organization, and systems that those responsible for managing the project shall utilize. The content and extent of detail of the PMP will vary in accordance with the size and type of project and status of project execution.

Project Manager An individual assigned responsibility and authority for successfully accomplishing the goals of a project. The project manager is responsible for planning, controlling, reporting, and managing the project effort.

Projectizing Identifying an individual or group of similar and/or associated activities that have a defined scope, schedule, and cost supporting a defined end-state.

Quality Assurance All planned and systematic action necessary to provide adequate confidence that a facility, structure, system, or component will perform satisfactorily in service.

Quality Control All actions necessary, including site construction engineering and inspections, to control and verify features and characteristics of a material, process, product, or service to specified requirements. Quality control is the process through which actual quality performance is measured and compared with standards.

Quantity Survey Using standard methods measuring all labor and material required for a specific building or structure and itemizing these detailed quantities in a book or bill of quantities.

Range of Accuracy or Probable Contingency A term used to imply the comparison of

estimate costs to actual costs incurred under realistic conditions and the employment of qualified supervision and experienced craftsmen. This term is not intended to imply the comparison of one estimate with other estimates that were prepared and submitted on a competitive basis.

Remedial Action A subactivity (CERCLA term) in a remedial response involving actual implementation, following remedial design, of the selected source control and /or off-site remedial effort.

Remedial Design The final design specifications and drawings are developed for remediation work. All engineering required to perform the remediation is complete.

Remedial Investigation (RI) The Comprehensive Environmental Response, Compensation, and Liability Act process of determining the extent of hazardous substance contamination and, as appropriate, conducting treatability investigations. The RI is often done in conjunction with the Feasibility Study.

Resource Conservation and Recovery Act (RCRA) A congressional mandate that requires the management of regulated hazardous waste and requires that permits be obtained for government facilities that treat, store, or dispose of hazardous waste. RCRA establishes standards for these facilities and requires corrective actions (e.g., remediation) of past releases of hazardous waste from regulated waste management units.

Risk The degree of dispersion or variability around the expected or “best” value that is estimated to exist for the economic variable in question (e.g., a quantitative measure of the upper and lower limits that are considered reasonable for the factor being estimated).

Risk Analysis Estimate of the probability of loss from some hazard, contingency or circumstance. Commonly used to signify the estimate of liability occurring as a result of loss or activity involving nonrecovery of cost and fee.

Scope The equipment and materials to be provided and the work to be done. Scope is documented by the contract parameters for a project to which the company is committed.

Scope of Work The project description, as provided by the project manager, that describes and defines the project in a manner sufficiently to enable the project estimator to develop a reasonable estimate of costs. The scope of work is a project-specific document that should summarily support and fully control the project estimate of cost. There should never be any discrepancies between the scope of work document and the project estimate.

Site Inspection The purpose of the site inspection is to acquire the necessary data to confirm the existence of environmental contamination at identified potential sites and to assess the associated potential risk to human health, welfare, and the environment.

Stakeholder Those persons and/or groups of people and organizations who are affected or perceive that they are affected by the DOE programs. Stakeholders include DOE management and employees (internal) and executive, legislative, and regulatory groups; public

representatives; the general public; intervening groups; special interest groups; contractors; suppliers; and universities (external).

Standard Labor Productivity Factor A standard factor used to determine the quantity a single working unit can produce in a specified period of time. The standard labor productivity factor is used to multiply the quantity of a given element of cost against the labor rate to determine the labor cost.

All estimates are factored based on a specified unit per work-hour unless noted otherwise in the estimate. The standard labor productivity factor is the rate as determined in Means, Richardson, or other estimating standards, exclusive of such adjustments as craft support, supervision, unusual job conditions, or any other factors or markups.

Contingency is itemized separately and is not to be included in or built into the labor productivity factor.

Superfund Amendments and Reauthorization Act (SARA) The 1987 Act amending and reauthorizing CERCLA for responding to hazardous waste sites and increasing the size of the fund.

Systems Engineering Approach The synthetic mode of thought applied to systems problems. A way of thinking that involves a series of steps accomplished in a logical manner and directed toward the development of an effective and efficient product or system.

Take-Off Measuring and listing from drawings the quantities of materials required in order to price their cost of supply and installation in an estimate and to proceed with procurement of the materials.

Time Sensitive A term applied to those elements of cost that will be expended or incurred on a time-unit basis (monthly, weekly, hourly, etc.) and that are a subset of indirect costs. A cost engineer's salary on a project is a time-sensitive cost as long as that engineer is on the project.

Title I Design The preliminary stage of project design. In this phase, the design criteria are defined in greater detail to permit the design process to proceed with the development of alternate concepts and a Title I design Summary, if required.

Title II Design An intermediate estimate used to verify that the Title I design details still remain within the project funding.

Title III Design The definitive stage of project design. The approved Title I concept and the supporting documentation prepared for the Title I forms the basis of all activity in Title II. Definitive design includes any drawings, specifications, bidding documents, cost estimates, and coordination with all parties which might affect the project; development of firm construction and procurement schedules; and assistance in analyzing proposals or bids.

Total Estimated Cost (TEC) An estimate performed during any stage of a project, consisting of the total forecast cost of a contracted effort. A TEC does not include the total cost of the entire

project or program as contrasted by the TPC. Total Estimated Cost is the construction costs of the project, includes direct and indirect construction costs and initial equipment necessary for startup of operations, and may include the forecasted costs for land and land rights, engineering/design.

Total Project Cost (TPC) The TPC is the total monetary funding of an entire project effort. The TPC includes the Design/Engineering effort; preplanning and planning costs; life cycle costs including facility operational and maintenance costs; and all costs elements of the TEC. The TPC consists of all costs specific to a project incurred prior to startup of facility operation, all research and development costs, operating costs, and capital equipment costs as specifically associated with a facility or process.

Uncertainty Unknown future events that cannot be predicted quantitatively within useful limits (e.g., accidents that destroy invested facilities, a major strike, or a competitor's innovation that makes the new product obsolete).

Unit Cost A collection or assembly of costs, usually used at the conceptual level of estimate, determined by the makeup of a collection of several detailed elements of cost assembled together.

Unit Prices Cost per unit of measurement for materials or services.

Variable Costs Those costs that are a function of production (e.g., raw materials costs and by-product credits) and those processing costs that vary with plant output (such as utilities, catalysts and chemicals, packaging, and labor for batch operations).

Wage Rates See **Labor (Wage) Rates**.

Work Breakdown Structure A product-oriented matrix that organizes, defines, and graphically displays all work elements of a project in an organized and structured code framework developed for performance measurement reporting. Separate work breakdown structure elements should be utilized whenever possible for differing functional organizations and resources.

Appendix A: Cost-Estimating Terms and Definitions

Life Cycle Step Dictionary

This appendix provides an example of a life cycle step dictionary.

Class: WS

Step Number: 1

Step Title: Phase 1 Work Plan

Step Information: This task includes all activities required to prepare, review, revise, and approve a Phase 1 Work Plan. A work plan contains the following information: an introduction, a detailed description of the waste site (including physical setting), the initial evaluation, the work plan rationale, and a detailed analysis of the proposed characterization activities.

Class: WS

Step Number: 2

Step Title: Phase I Characterization

Step Information: This task includes all field work and laboratory analysis to characterize a waste site in accordance with the work plan. Included in this task are subcontractor mobilization, well drilling, media sampling, geo/hydrogeological investigations, and disposal of investigation derived waste.

Activities:

1. Mobilization to the Field, Vegetation Removal, and Site Preparation.

2. Characterization Support–Complete characterization activities in accordance with the Phase II Work plan. ER exempt and non-exempt labor will be used to provide oversight and compile and validate characterization data.

3. Biota/Vegetative Sampling–SRTC will perform sampling of aquatic and terrestrial biota and vegetation for the ecological risk portion of the Baseline Risk Assessment. This work is important to assess the potential for biotransfer of contamination into the environment.

4. Biota/Vegetative Sample Analysis–SRTC and the Environmental Monitoring Section will prepare samples of vegetation and biota, and perform chemical analyses of the samples. Analyses will consist of radionuclide and metals analyses.

5. Technical Field Oversight–The subcontractor will provide technical field oversight, sample collection, field and laboratory data validation, sample preservation and storage, limited data interpretation, and documentation of all aspects of the field characterization.

6. Well Installation and Soil Borings–Well drilling and soil sampling services will be supplied by subcontractors (drilling rigs and drilling personnel).

7. Analytical Laboratory–A subcontracted analytical laboratory will be responsible for analyzing the bulk of the soil and water samples associated with the characterization. Analyses will consist of radionuclides, volatiles, or metals. Separate offsite laboratories will be used for a percentage of the groundwater, semi-volatile analyses of non-radioactive soil samples, and various QA related samples.

Class: WS

Step Number: 2

Step Title: Phase II Work Plan

Step Information: This task includes all activities required to prepare, review, revise, and approve a Phase II Work Plan. A work plan contains the following information: an introduction, a detailed description of the waste site (including physical setting), the initial evaluation, the work plan rationale, and a detailed analysis of the proposed characterization activities.

Class: WS

Step Number: 4

Step Title: Phase II Work Plan

Step Information: This task includes all activities required to prepare, review, revise, and approve a Phase II Work Plan. A work plan contains the following information: an introduction, a detailed description of the waste site (including physical setting), the initial evaluation, the work plan rationale, and a detailed analysis of the proposed characterization activities.

Activities:

1. Mobilization to the Field, Vegetation Removal, and Site Preparation.

2. Characterization Support–Complete characterization activities in accordance with the Phase II Work plan. ER exempt and non-exempt labor will be used to provide oversight and compile and validate characterization data.

3. Biota/Vegetative Sampling–SRTC will perform sampling of aquatic and terrestrial biota and vegetation for the ecological risk portion of the Baseline Risk Assessment. This work is important to assess the potential for biotransfer of contamination into the environment.

4. Biota/Vegetative Sample Analysis–SRTC and the Environmental Monitoring Section will prepare samples of vegetation and biota, and perform chemical analyses of the samples. Analyses will consist of radionuclide and metals analyses.

5. Technical Field Oversight–The subcontractor will provide technical field and storage, limited data interpretation, and documentation of all aspects of the field characterization.

6. Well Installation and Soil Borings–Well drilling and soil sampling services will be supplied by subcontractors (drilling rigs and drilling personnel).

7. Analytical Laboratory–A subcontracted analytical laboratory will be responsible for analyzing the bulk of the soil and water samples associated with the characterization. Analyses will consist of radionuclides, volatiles, or metals, Separate offsite laboratories will be used for a percentage of the groundwater, semi-volatile analyses of non-radioactive soil samples, and various QA related samples.

Class: WS

Step Number: 5

Step Title: Interim Actions

Step Information: This task is the action required to remove an immediate health or environmental risk or to remove materials that obstruct characterization. This task includes review, ground penetrating radar, magnetometer, electromagnetic survey, and removal actions in accordance with regulatory requirements.

Class: WS

Step Number: 7

Step Title: RI Summary Report

Step Information: This task includes all efforts related to the preparation of findings of the Remedial Investigation once data has been evaluated. Activities include preparing the site characterization summary, presenting the data, preparation, review, and approval of the report.

Activities:

1. Preparation of RI Summary Report–Subcontractors will assist ER personnel in the preparation of a RI Summary Report for the operable unit. The preparation includes: investigation summaries, discussion of the physical characteristics of the unit, discussion of the investigation findings, discussion of the modeling associated with the BRA, discussion of the BRA findings, summary and conclusions. The task also includes the development of various draft and final documents.

2. RI Summary Support–ER exempt and non-exempt labor will supply the oversight support, compile the reports, and forward work to EPA/SCDHEC for review and approval.

3. EPA/SCDHEC RI Summary Report Review–This period is allocated for regulatory review of the RI Summary Report.

4. RI Summary Report Revision–This period is allocated to revise the Remedial Investigation Summary Report. Subcontractors will assist ER personnel in the preparation of a revised RI Summary Report based on the regulators comments.

5. EPA/SCDHEC approval of RI Report–This is a period during which the EPA/SCDHEC will approve the RI Summary Report.

Class: WS

Step Number: 8

Step Title: Baseline Risk Assessment

Step Information: This task includes all efforts associated with performing an evaluation of the potential hazards at the waste site. The task includes work on the assessment of exposure, toxicity, and characterization of risk to human health and the environment.

Activities:

1. Preparation of BRA–Subcontractors will assist ER personnel in the preparation of a Baseline Risk Assessment for the operable unit. This work will consist of Groundwater and vadose zone fate and transport modeling studies, development of COC and Receptor Scenarios, Hazard Assessment, Toxicity Assessment, Risk Characterization, and the development of various draft and final documents.

2. BRA Support–The Savannah River Technology Center (SRTC) will be responsible for providing technical input, review, and comment response support as requested by the Environmental Restoration Department.

3. EPA/SCDHEC Review BRA Regulatory–This period is allocated for regulatory review of the BRA Report.

4. Revision of BRA–This period is allocated to revise the BRA Report. Subcontractors will assist ER personnel in the preparation of a revised BRA based on the regulator's comments.

5. EPA/SCDHEC approval of BRA–This is a period during which the EPA/SCDHEC will approve the Baseline Risk Assessment.

Class: WS

Step Number: 9

Step Title: Feasibility Study

Step Information: The Feasibility Study will include a preliminary screening of technologies for applicability to this waste unit, development and screening of alternatives, and detailed analysis of alternatives. The technologies will be analyzed based on nine CERCLA criteria which include health risk, cost, and technical applicability. Results of the treatability study (if required) and the risk evaluation of remedial alternatives will be used in the screening and analysis.

Activities:

1. Feasibility Study (FS) Support–An initial screening of remedial alternatives will be completed based on the initial characterization data. This initial screening may be revised when additional characterization data becomes available. Environmental Restoration (ER) Engineering personnel as well as ER programmatic support personnel (as needed) will be included in this activity. The ER Engineering personnel will provide task team leadership, technical management and oversight, and document review and approval. The ER Engineering personnel will also develop the document review and approval. The ER Engineering personnel will also develop the document review and approval. The ER Engineering personnel will also develop the FS. The FS will be forwarded for internal review (WSRC-ER) WSRC-EPD, DOE-SR , etc.) and the FS will be revised by ER personnel based on the internal comments received. The FS will then be submitted to the regulators for review.

2. Feasibility Study–The results of the risk evaluation of remedial alternatives (RERA), which evaluates the reduction in human health risk associated with the different remedial alternatives (RERA) identified, will be included in the FS. Site Geotechnical Services (SGS, formerly Systems Engineering (SE) will prepare the RERA.

3. Regulatory Review of Feasibility Study–Per the Federal Facilities Agreement (FFA), the regulators will review and comment on the FS.

4. Revise Feasibility Study–The document will be revised by ER personnel based on regulatory comments received. The revised document will be submitted for internal review before being submitted to the regulators. A comment response package will also be developed during this time. The FS and comment response package will be submitted after receipt of the regulatory comments.

5. Feasibility Study Approval–The regulators will review and approve the revised FS document.

Class: WS

Step Number: 10

Step Title: Treatability Studies

Step Information: This task includes the efforts required to prepare and conduct either a conceptual (lab), bench-scale, or pilot-scale study. These activities include the preparation or amendment of the treatability study work plan, procurement, sample analysis, design activities, equipment assembly, performance of the test, and preparation of Treatability Study Interim Action Proposed Plan (IAPP) and Treatability Study Interim Record of Decision (IROD).

Activities:

1. Treatability Study Support–ER Engineering personnel as well as ER programmatic support personnel (as needed) will be included in this activity. The ER Engineering personnel will provide task team leadership, STR management and oversight, and document review and approval.

2. Treatability Study Work Plan Development–The Treatability Study Work Plan will be developed by the Savannah River Technology Center (SRTC) and an ER Engineer and forwarded for internal review (WSRC-ER, WSRC-EPD, DOE-SR, etc.). The document will be revised based on the comments received before being submitted to the regulators. The engineer will also provide technical oversight.

3. Regulatory Review of Treatability Study Work Plan–The regulators will review and comment on the Treatability Study Work Plan.

4. Revise Treatability Study Work Plan–The Treatability Study Work Plan will be revised by ER personnel and SRTC based on regulatory comments received. The revised work plan will be submitted for internal review before being submitted to the regulators. A comment response package will also be developed during this time. The Treatability Study Work Plan and comment response package will be submitted after receipt of the regulatory comments.

Class: WS

Step Number: 11

Step Title: Additional Studies

Step Information: This task includes efforts required to increase the available data about a waste site. These activities may include a study to assess the effects of a waste site on a nearby stream.

Class: WS

Step Number: 12

Step Title: Additional Characterization

Step Information: This task involves additional characterization efforts required to fully characterize the waste site after the approval of the initial investigation report. These activities may include well sampling, media sampling, alternative risk analysis, and targeted characterizations.

Class: WS

Step Number: 13

Step Title: Preliminary Engineering

Step Information: This task includes preliminary engineering requirements. They include developing baseline documentation such as the Functional Performance Requirements (FPR), the Functional Design Criteria (FDC), the conceptual design, and the project estimate. These efforts end upon project authorization.

Class: WS

Step Number: 14

Step Title: Regulatory Requirements

Step Information: This task includes the activities required to present the preferred closure alternative to the regulators for approval. This is in the form of a Proposed Plan and Record of Decision (ROD). The Proposed Plan document describes the preferred alternative for remediation in layman's terms. The ROD is the document that describes the remediation option agreed upon by the DOE, EPA, and SCDHEC. The task includes the preparation, issue, revision, and approval of regulatory documents. It may also include attendance at public meetings.

Activities:

1. Regulatory Requirements Support–ER Engineering personnel as well as ER programmatic support personnel (as needed) will be included in this activity. The ER Engineering personnel will provide task team leadership, Subcontract Technical Representative (STR) management and oversight, and document review and approval.

2. Draft Proposed Plan Development–The draft Proposed Plan will be developed by the subcontractor and routed to WSRC-ER, WSRC-EPD, and DOE-SR for review and comment. Upon receipt of comments, revisions will be made, and the document will be submitted to the regulators for review.

3. Regulatory Review of the Proposed Plan–The regulators will review and comment on the final draft Proposed Plan.

4. Revision of Proposed Plan–The final draft Proposed Plan will be revised based on the regulatory comments received. A comment response package will also be developed. The revised Proposed Plan and comment response package must be submitted after receipt of regulatory comments.

5. Proposed Plan Approval–The revised Proposed Plan will be submitted to the regulators for approval.

6. Proposed Plan Public Comment Period–The Proposed Plan will be made available to the public for review. The public will have a chance to question the information that is contained in the Proposed Plan. A public meeting may be held in order to provide responses to the public's questions.

7. Draft ROD Development–The draft ROD will be developed by the subcontractor and routed to WSRC-ER, WSRC-EPD, and DOE-SR for review and comment. Upon receipt of comments, changes will be made to the draft document, and the document will be submitted to the regulators for review. A "Responsiveness Summary" is developed and added to the ROD based on comments received during the Proposed Plan public comment period.

8. Regulatory Review of the ROD–Regulatory Review of the ROD–Per the FFA, the regulators will review and comment on the final draft ROD.

9. Revision of ROD–The draft ROD will be revised based on the regulatory comments received. A comment response package will also be developed. The revised ROD and comment response package will have to be submitted after receipt of regulatory comments.

10. ROD Approval–The revised ROD will be submitted to the regulators for approval.

Class: WS

Step Number: 15

Step Title: Detailed Engineering & Preconstruction Activities

Step Information: This task includes all of the definitive design work, including writing the Site Safety and Health Plan, the obtaining of work permits, and all other activities necessary to begin construction.

Class: WS

Step Number: 16

Step Title: Construction

Step Information: This task includes activities such as mobilization, remediation performance, and demobilization. This activity ends when the Approval for Final Acceptance is received.

Class: WS

Step Number: 17

Step Title: Post-Construction Activities

Step Information: This activity includes the cost for the professional engineer to perform a closure certification, the final survey, and any other activities needed to complete the closure. This activity does not include post-closure monitoring and maintenance.

Class: WS

Step Number: 18

Step Title: Well Monitoring

Step Information: This task includes the cost to contract a laboratory to conduct quarterly groundwater analyses in compliance with SCDHEC/EPA regulations.

Class: WS

Step Number: 19

Step Title: Program Support

Step Information: This task includes the time required by Waste Site managers, an environmental specialist, technicians, and clerical personnel to support the activities being conducted for the waste sites. This includes, but is not limited to, management oversight for regulatory and preproject/project activities, cost account management for financial activities, acquisition of data from sampling activities, field liaison to Health Protection field representatives, data entry, evaluation of analytical data, transfer of data into usable form, support of the remedial technology selection process, assistance to subcontractors in characterization and assessment, and waste site inspections and follow-up.

Class: GW

Step Number: 2

Step Title: GW Characterization

Step Information: This task includes the efforts to mobilize resources, perform field work, laboratory analysis, and other activities to define groundwater and subsurface parameters. These activities include:

1. The Subsurface Characterization tasks will be performed by subcontractors to delineate the extent of contaminant plumes. The subsurface characterization will consist of the drilling and installation of monitor wells, and sampling (both Direct Push Technology (DPT) and Exploratory Borings (EB) along transect lines, along with soil gas work. Sampling and the analyses will aid in determining the extent of the contamination in this phase of the field investigation plan, and for input into the corrective action engineering designs.

2. Cone Penetration Technology (CPT) and Hydropunch–CPT and Hydropunch work will be performed as a portion of the Field Investigation Plan to support characterization and remediation activities.

3. Monitor wells will be installed in order to monitor the plume(s) of contamination at the MWMF.

4. Soil Analysis–Soil Analysis will be performed for source assessment.

5. Statistics–Savannah River Technology Center (SRTC) will perform statistics on the data from the well sampling and analysis.

6. Pump / Injection Tests–Pump / Injection Tests will be performed to determine aquifer parameters needed for the design of the remediation treatment facility.

7. Extraction Well(s)–Extraction Well(s) will be installed and tested to determine the rates at which the

contaminated groundwater may be extracted for treatment.

8. Piezometers will be installed by a subcontractor to assist in pumping tests for aquifer characterization as a support in the Remediation effort.

Class: GW

Step Number: 4

Step Title: Modeling

Step Information: This task includes the activities required to generate groundwater flow and transport models related to the hydrostratigraphy of the groundwater for subsurface and Remediation characterization. These computer generated models will support the assessment and corrective action phases of the groundwater Remediation program. Modeling will be needed throughout Phase 0 of the Corrective Action Plan implementation for calculating effects on the subsurface groundwater pathways with implementation of corrective action; i.e. optimization of well field layout, predicting the effectiveness of the CAP (short-term), evaluation of the other effects on the environment (wetland, facilities, and streams), and estimating the flow rates/capacities in the treatment system.

1. Modeling Support–An Environmental Restoration (ER) modeler will provide Modeling Support for the subsurface characterization studies.

2. Groundwater Modeling, final CAP–Groundwater Modeling will be required for the final CAP to assist in engineering Remediation design for corrective action. This modeling will be performed by a subcontractor.

3. Remediation Modeling–Remediation Modeling will need to be performed as an ongoing effort during Remediation design to assist in engineering implementation and operation of the treatment system, to assess effectiveness of the system, and effects on the aquifers and confining units.

Class: GW

Step Number: 5

Step Title: Human Health & Ecological Studies

Step Information: This task includes the characterization of contamination and associated ecological impacts, determination of exposure pathways and scenarios and quantification of risks associated with the contaminants of concern. Major objectives include characterization of the distribution of contamination in surface waters, soils and sediments, and biota in the vicinity, providing information required to model the fate and transport of discharged contaminants, and providing a basis for determining the source of the observed contamination.

1. Human Health Support–The human health risk assessor will also be responsible for the integration with work plans, feasibility studies, proposed plans and the ROD.

2. Ecological Support–An ER Ecologist will support the ecological aspects in the assessment of risk from contaminated groundwater. The ecological risk assessor will also be responsible for the input/approval of the ecological integration with work plans, feasibility studies, proposed plans and ROD. A final risk assessment will be required after more ecological and well data are acquired for health and ecological evaluation.

3. Bi-Annual Wetlands Sampling–Bi-Annual Wetlands Sampling will be performed by a subcontractor.

The chemical analyses of the samples will be performed by a subcontractor in the activity below. The samples will be taken twice in a twelve month period to provide a spring and fall sampling.

4. Wetland Chemical Analyses–A subcontractor will provide the analyses for the wetland samples taken in the activity above. The analyses will e episodic in nature corresponding to the spring and fall sampling.

5. Soil, Sediment and Water Sampling–Soil, Sediment and Water Sampling will be conducted to better delineate the impact to the soil, sediment and water in the near vicinity. This is a one-time event and will determine if further sampling might be required.

Class: GW

Step Number: 6

Step Title: Feasibility Studies

Step Information: This task includes efforts to select remedial alternatives to undergo full evaluation as well as the detailed analysis of these alternatives. Alternatives are evaluated on the basis of short and long term effectiveness, reduction of toxicity/mobility, implementability and cost. This task is divided into three subtasks: development and screening of potential technologies, assessment of risk of alternatives, and conducting a detailed analysis of selected alternatives.

Class: GW

Step Number: 7

Step Title: Treatability Studies

Step Information: This task is conducted to evaluate technology feasibility or provide engineering parameters for corrective action system design or procurement.

Class: GW

Step Number: 8

Step Title: Additional Studies/Characterizations

Step Information: These tasks include activities that are performed to increase the available data about a site in support of preparing regulatory decision documents or engineering designs. Some examples may include system optimization and engineering alternative studies.

Class: GW

Step Number: 9

Step Title: Regulatory Requirements

Step Information: This task includes preparing, reviewing, and revising all regulatory decision documents associated with a project. Renewals of regulatory decision documents are also covered under this step. Process permitting, such as NPDES permitting, is covered under the engineering phases of the project.

Class: GW

Step Number: 10

Step Title: Preliminary Engineering

Step Information: This task includes preliminary engineering requirements as identified in DOE Order 4700.1. It includes developing baseline documentation such as the Functional Performance Requirements (FPR), the Functional Design Criteria (FDC), the conceptual design, and the project estimate. These efforts end upon project authorization.

Class: GW

Step Number: 11

Step Title: Detailed Engineering & Preconstruction

Step Information: This task includes all of the definitive design work, the writing of the Site Safety Health Plan, the obtaining of work permits, and all other activities necessary to begin construction.

Class: GW

Step Number: 12

Step Title: Construction

Step Information: This task includes the activities such as, mobilization, performing the Remediation, and demobilization. The activity ends when the Approval for Final Acceptance is received.

Class: GW

Step Number: 13

Step Title: Post Construction Activities

Step Information: This activity includes the cost for the final survey and any other activities needed to complete the Remediation. This activity does not include post closure monitoring and maintenance.

Class: GW

Step Number: 14

Step Title: Operations

Step Information: This task includes the materials and labor necessary for onsite organizations to operate Environmental Restoration Remediation systems. This includes facility operations, preventive maintenance, and maintenance not requiring a cost project to implement.

Class: GW

Step Number: 15

Step Title: Project Management and Support

Step Information: This task includes project management activities to include clerical, budget management tasks, and technical support. Routine well monitoring and analysis is also included. These activities include:

1. The Project Team Engineer develops and manages project costs, scope and schedules. These tasks coupled with development of the Annual Operating Plan (AOP) and the Five Year Plan (FYP), make up a majority of the responsibilities of the conducting/preparing monthly performance analysis reports, development of outyear budget validation documentation, and management of activities/funding provided to support organizations.

2. The Cost Account Manager (CAM) is responsible for the overall management of the ADS. Also included is the timely delivery of award fee deliverables. The CAM is also responsible for the timely submission of all regulatory requirements, and to interface with DOE counterparts.

Class: GW

Step Number: 17

Step Title: Start-Up

Step Information: Start-Up activities ensure that constructed facilities are functional and acceptable for operation. Component tests and/or checks are conducted to assure the adequacy of component design, and its installation, material, and workmanship prior to and during the system testing phase. System and facility tests combine components to verify that individual systems, and the facility as a whole, perform as specified. Analyses may be performed to ensure the success of the facility and systems tests. Efforts from Environmental Restoration, Start-Up Engineering, and Reactor Materials are included in this lifecycle step.

Class: GW

Step Number: 18

Step Title: Maintenance

Step Information: This task includes any routine and non-routine maintenance activities and process enhancements that require a cost project to implement and complete.

Class: GW

Step Number: 19

Step Title: Compliance Support

Step Information: This step includes any activities required to satisfy regulatory and non-regulatory requirements during the operations phase. This includes, but is not limited to, RCRA Part B Permit 5 Year Updates, Installing and removing monitoring wells, and producing updated groundwater models.

Appendix B: Life Cycle Step Dictionary

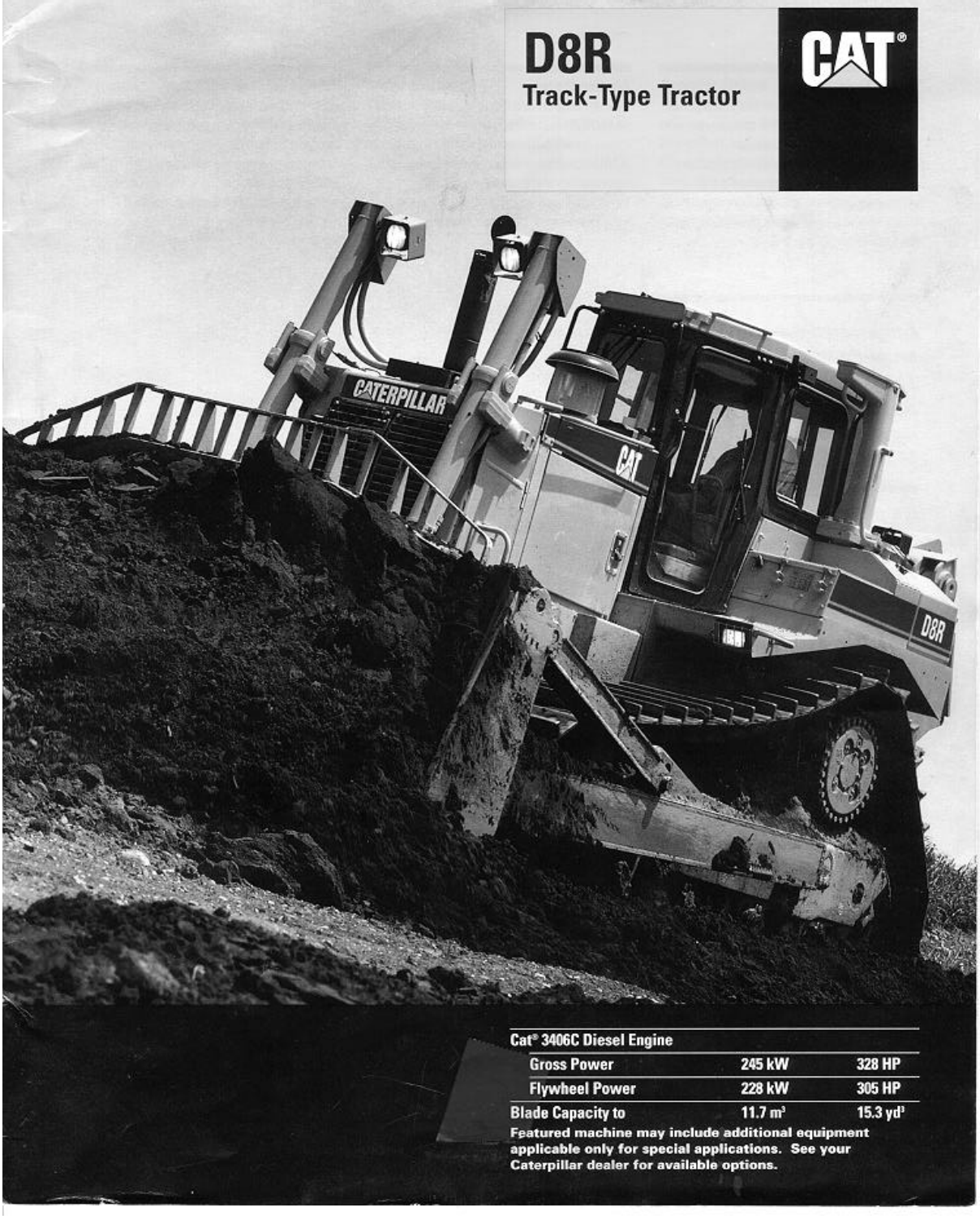
D8R
Track-Type Tractor
CAT
CATERPILLAR
CAT
D8R
Cat® 3406C Diesel Engine
Gross Power 245 kW 328 HP
Flywheel Power 228 kW 305 HP
Blade Capacity to 11.7 m³ 15.3 yd³
Featured machine may include additional equipment applicable only for special applications. See your Caterpillar dealer for available options.

D8R Track-Type Tractor

The D8R offers unequaled balance, traction and power to keep large blade loads moving fast.

Power Train
The rugged, easy-to-service Caterpillar® 3406C engine has a 55% torque rise and meets world wide emissions regulations. An exclusive Caterpillar designed torque divider allows the engine to respond quickly to varying work applications while providing high fuel efficiency. **pg. 4-5**

Cooling System
✔ *The Advanced Modular Cooling System (AMOCS) has excellent cooling capacity with increased air flow.* AMOCS allows the machine to be operated in the most demanding environments. **pg. 6**

Differential Steering
Caterpillar designed and manufactured differential steering provides smooth, one handed turning control, with uninterrupted power to both tracks. The differential steer allows easier turns while maintaining desired ground speed for fast cycle times and high production. **pg. 7**

Engineered for reliable production in the toughest working conditions.
The D8R's increased horsepower keeps material moving for quick cycle times and maximum productivity. The Advanced Modular Cooling System keeps the engine operating efficiently in high ambient temperatures.

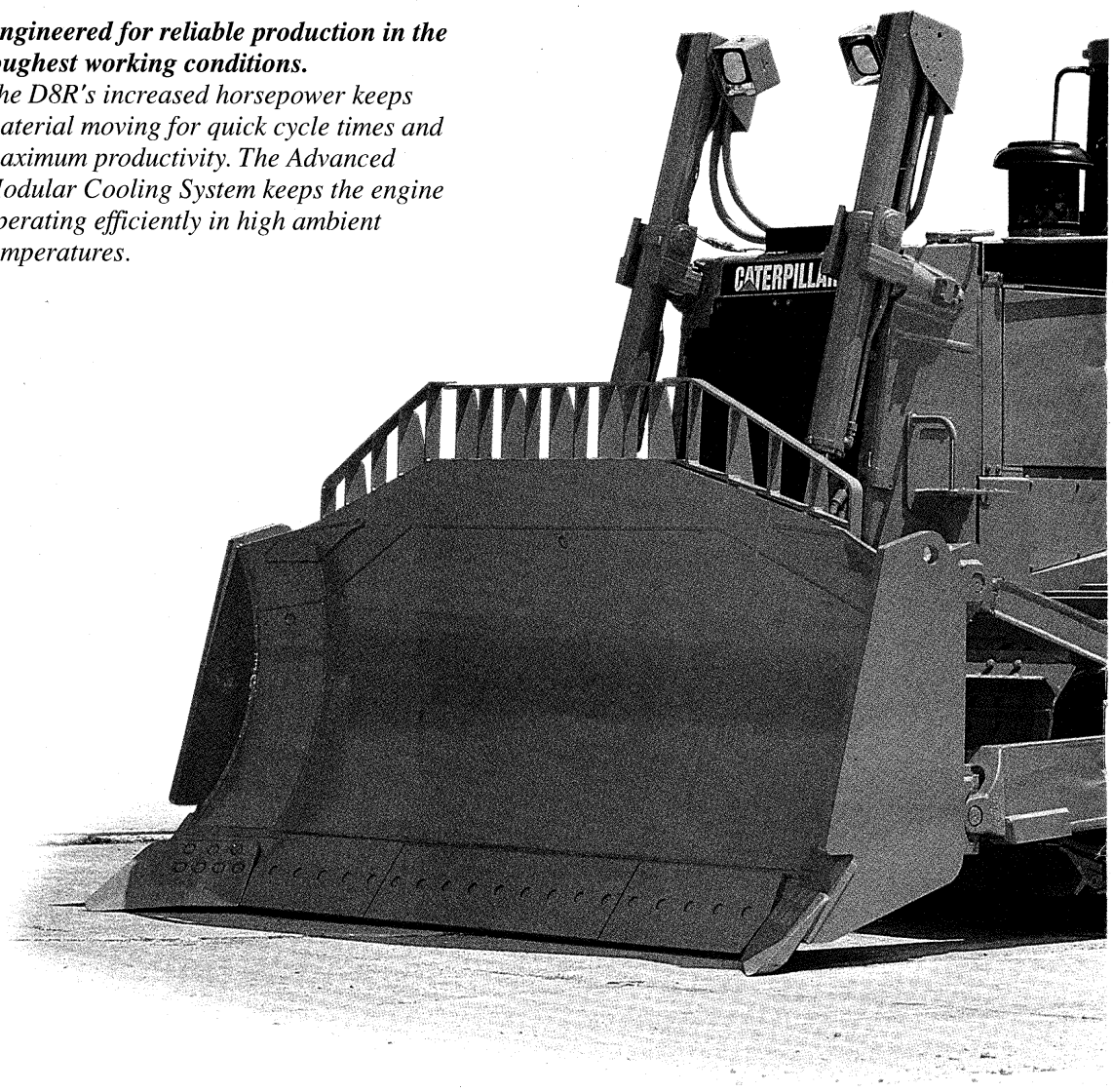

2

Structure
Mainframe is heavy, strong and durable. Full box sections, steel castings and continuous rolled rails provide durable support to the suspended undercarriage, elevated final drives and other integral frame components. **pg. 8**

Undercarriage
The elevated sprocket moves the final drives above the work area, isolating them from ground impacts. The suspended undercarriage puts more track on the ground for higher traction and less slippage. It also absorbs shocks for a smoother ride and longer machine life. **pg. 9**

Operator Station
The comfortable, efficient control deck encourages top output. Controls are low-effort and easy to reach. Cat Contour Series Seat provides proper support and automotive comfort. The front, side and rear views from the seat are exceptional. **pg. 10-11**

Work Tools
The variety of bulldozer blades, rippers and other options allow you to customize the D8R to match your specific application. **pg. 12**

Load Sensing Hydraulics
The Load Sensing Hydraulic System controls hydraulic implement pump flow to assure the most efficient use of the available engine power while reducing fuel consumption. **pg. 12**

Large Capacity Fuel Tank
✔ *The large capacity fuel tank allows the operator up to 12 hours without refueling.* **pg. 15**

✔ *New feature*

3

Power Train

The Caterpillar 3406C engine, torque divider and field proven, power shift transmission provide an excellent balance between efficiency and power.

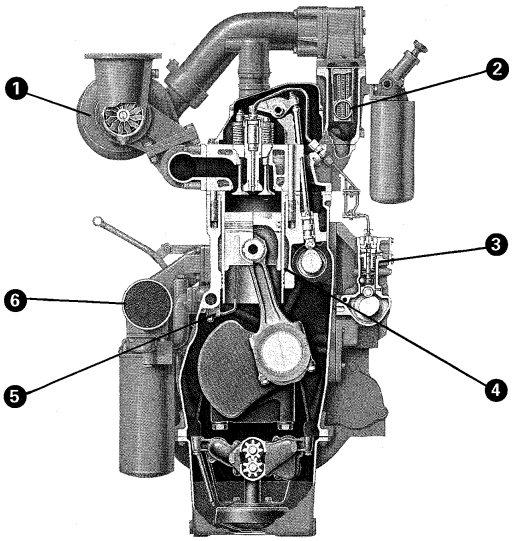

Cat 3406C Engine performs at full-rated net power of 228 kW (305 hp) at 2100 rpm with a torque rise of 55%. The large displacement and high torque rise allow the D8R to doze through tough material. The high displacement rating allows long hours of continuous operation.

3406C Engine meets worldwide emissions regulations for the Environmental Protection Agency, the European Union and the California Air Resources Board.

Turbocharging and aftercooling provide high horsepower while keeping RPM and exhaust temperatures low. The efficient, direct injection fuel system keeps fuel costs down.

A steel spacer between the block and head eliminates the need for block counterbores, extending block life.

Components live longer because oil-cooled pistons and full-length water-cooled cylinder liners provide maximum heat transfer for longer component life. The cylinder heads also utilize additional coolant passages to provide maximum cooling to the rear of the engine.

Stellite-faced valves, through-hardened crankshaft journals and steel-backed, copper-bonded aluminum bearings help assure reliable performance in the toughest duty.

Cat dealer's exchange program for major engine components can cut repair time and costs.

1 **Turbocharger**
2 **Aftercooler**
3 **High-pressure, direct-injection fuel system**
4 **Full-length, water-cooled cylinders**
5 **Oil and gallery cooled pistons**
6 **Oil cooler**

4

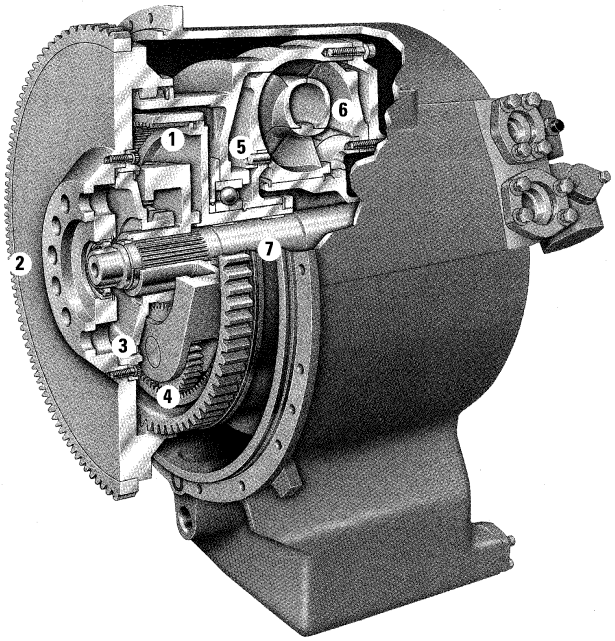

Torque Divider. A single-stage torque converter with output torque divider sends 70% of engine torque through the converter, 30% through a direct drive shaft for greater driveline efficiency and higher torque multiplication.

The torque converter shields the driveline from sudden torque shocks and vibration.

Elevated final drives are isolated from ground and implement induced impact loads for extended power train life.

- Crown-shaved drive gears provide smooth, quiet, low maintenance operation.
- Splash lubrication and Duo-Cone Seals extend service life.

Planetary Power Shift Transmission has 3-speeds forward and 3-speeds reverse and utilizes large diameter, high-capacity, oil-cooled clutches.

- Modulation system permits fast speed and direction changes.
- Modular transmission and bevel gear slide into rear case for servicing ease, even with ripper installed.
- Oil-to-water cooler for maximum cooling capacity.
- Forced oil flow lubricates and cools clutch packs to provide maximum clutch life.

Note: Artwork represents torque divider concept only.

1 Ring gear
2 Flywheel
3 Sun gear
4 Planet gear
5 Turbine
6 Impeller
7 Output shaft

5

Cooling System

Superior cooling and ease of service keep the D8R on the job and producing day after day.

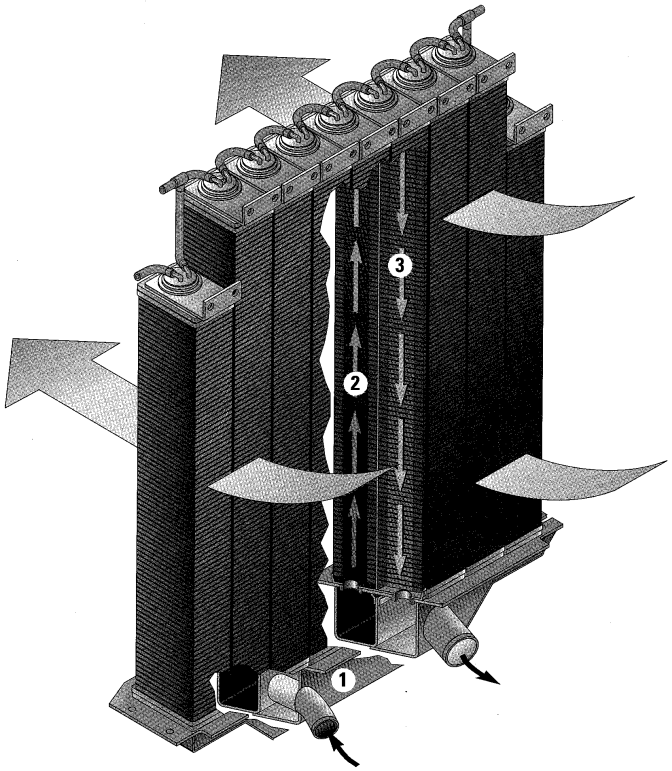

Advanced Modular Cooling System (AMOCS) utilizes an exclusive two pass cooling system and increased cooling surface area to provide significantly more cooling capacity than conventional systems.

Two pass cooling system circulates coolant from the sectioned bottom tank **(1)** up through one side **(2)** of the cooling element and down through the other side **(3)** returning it to the bottom tank.

The cooling elements are individual core modules that are connected to a sectioned bottom tank. There is no top tank to remove.

- 9 steel fins per inch.
- Brass tube construction within each core.

The servicing of the AMOCS can be performed without tilting the radiator guard.

- No need to remove or replace a major component as on single-core radiators.
- Each core module can be replaced individually (without removing the entire radiator), saving considerable cost and repair time.

6

Differential Steering

Hydraulics, not friction, are used to steer for more load-moving power during turns.

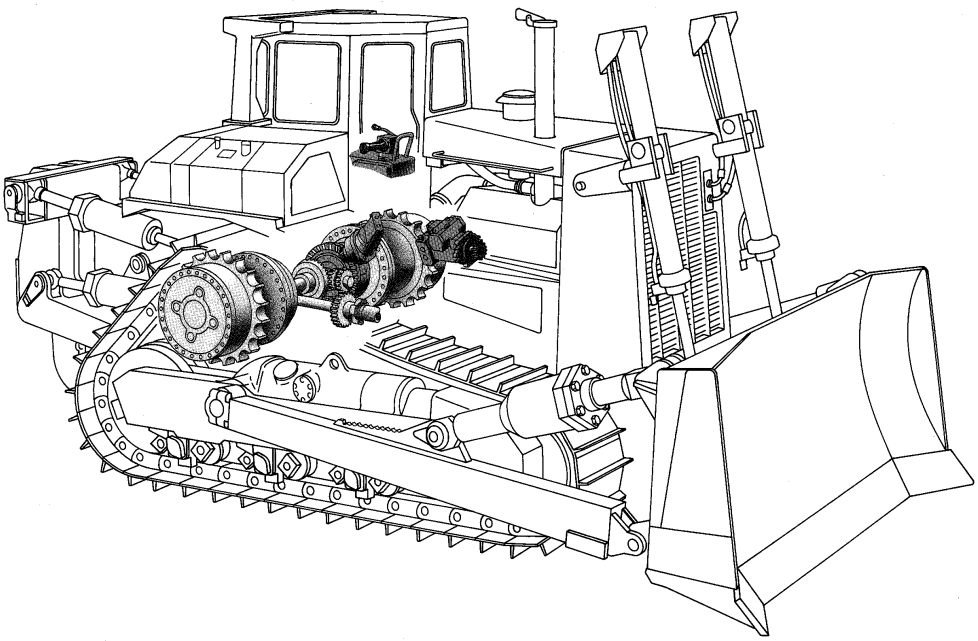

Differential Steering delivers uninterrupted power to both tracks to help maintain blade loads, reduce cycle times, and provide enhanced side slope capability.

The operator can steer and change directions easily with one hand.

- Steering is controlled by pulling the tiller back for a right turn or pushing it forward for a left turn.
- Rotating the tiller forward (clockwise) or backward (counter clockwise) selects direction of travel (forward/reverse).
- Transmission speed changes are controlled using the knob on the end of the tiller.

A planetary differential turns the machine by speeding up one track and slowing the other, while maintaining full power to both.

Tiller control allows the operator to work more precisely in close areas, around structures, obstacles, grade stakes, other machines or on fine grades.

Especially efficient in soft underfooting, where both tracks can power through turns to keep loads moving and maintain traction.

An efficient hydraulic system devotes one pump solely to steering with a separate pump to power implements. Adequate hydraulic power is available to steer and operate implements at the same time.

Structures

Durable design and construction stand up to the most demanding applications.

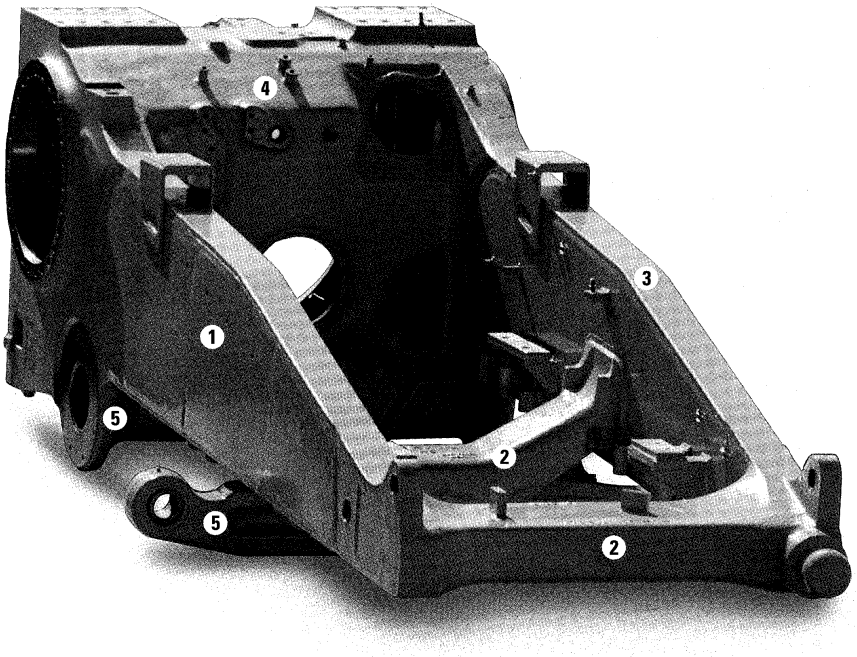

Mainframe Strength. The D8R mainframe is built to absorb high impact shock loads and twisting forces.

1 **Frame rails are full box section, designed** to keep components rigidly aligned.

2 **Heavy steel castings give added strength** to the main case, equalizer bar saddle, front cross member and tag-link trunnion.

3 **The top and bottom rails are continuous rolled sections,** with no machining or welding to provide superior mainframe durability.

4 **The main case elevates the final drives** well above the ground level work area to protect them from impact loads, abrasion and contaminants.

5 **A pivot shaft and pinned equalizer bar** maintain track roller frame alignment.

Tag-link construction brings the blade closer to the machine for more precise dozing and load control.

Tag-link design provides solid lateral stability and better cylinder positions for constant pryout independent of blade height.

8

Undercarriage

Caterpillar elevated sprocket tractors provide excellent traction, durability and ride with outstanding component life.

Suspended undercarriage design absorbs impact loads to reduce the shock loads transferred to the undercarriage by up to 50%.

Bogie suspension conforms more closely to the ground to provide up to 15% more ground contact, especially in hard, uneven terrain. Higher traction means less slippage, better balance, and a smoother ride.

Roller Frames are tubular, to resist bending and twisting, with added reinforcement where operating loads are the highest.

- Roller frames attach to tractor by a pivot shaft and pinned equalizer bar.
- Large pivot bushings operate in an oil reservoir.
- A low friction, no maintenance bushing is used in the saddle connection.
- Resilient pads restrain equalizer bar oscillation.
- The recoil system is sealed and lubricated.

1 Non-suspended undercarriage, without bogies, is available for applications involving moderate-impact, or highly abrasive materials.

- Also useful in grading applications where the operator must be aware of critical grade angles.

Sealed and Lubricated Track. Permanently coats the track pin with a sealed-in lubricant, minimizing metal-to-metal contact.

- Virtually eliminates internal pin and bushing wear.
- Lubricant is held in a reservoir in the track pin.

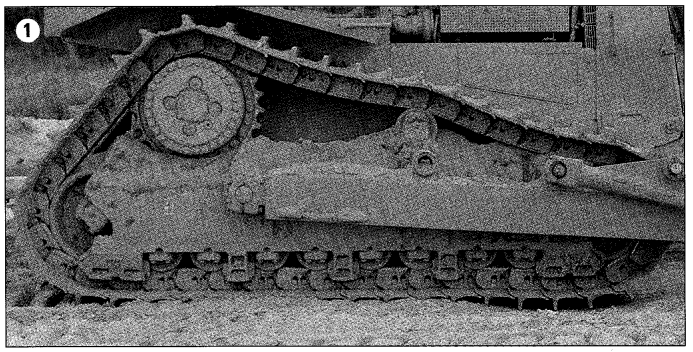

9

Operator Station

Designed for comfort and ease of operation.

10

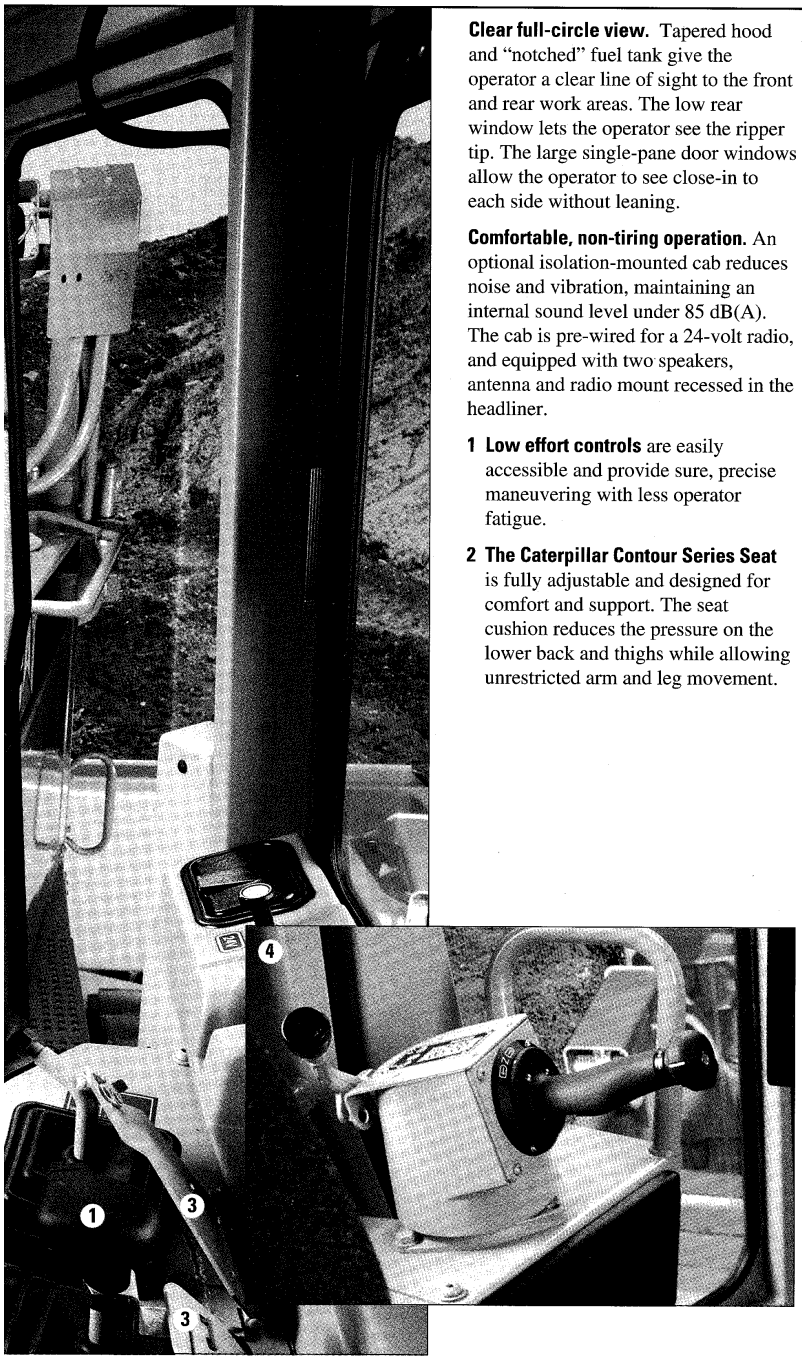

Clear full-circle view. Tapered hood and "notched" fuel tank give the operator a clear line of sight to the front and rear work areas. The low rear window lets the operator see the ripper tip. The large single-pane door windows allow the operator to see close-in to each side without leaning.

Comfortable, non-tiring operation. An optional isolation-mounted cab reduces noise and vibration, maintaining an internal sound level under 85 dB(A). The cab is pre-wired for a 24-volt radio, and equipped with two speakers, antenna and radio mount recessed in the headliner.

1 **Low effort controls** are easily accessible and provide sure, precise maneuvering with less operator fatigue.

2 **The Caterpillar Contour Series Seat** is fully adjustable and designed for comfort and support. The seat cushion reduces the pressure on the lower back and thighs while allowing unrestricted arm and leg movement.

3 **Implement control lever restraints,** when engaged, prevent inadvertent movement of control lever. These restraints accept standard Caterpillar padlocks.

4 **Dual twist tiller** controls the direction and degree of turns, forward-reverse shifting, and gear selection with one control.

5 **Electronic Monitoring System (EMS) and Gauge Group.** The Gauge Group includes engine coolant temperature, power train oil temperature, hydraulic oil temperature and fuel level. The EMS provides alert indicators that monitor coolant flow, coolant temperature, engine oil pressure, transmission oil temperature, transmission oil filter, alternator and hydraulic oil filter.

Work Tool Attachments

The D8R can be tailored to fit a variety of applications with many attachment options.

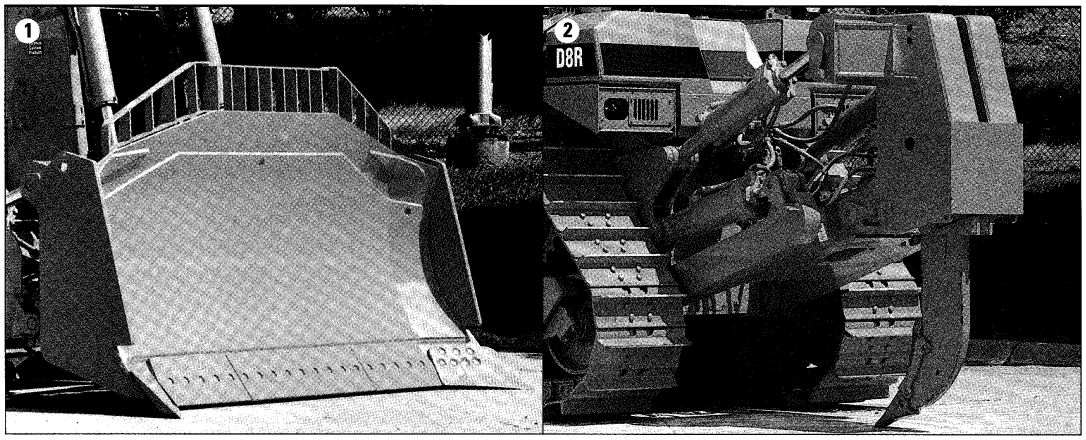

1 Bulldozers. The 8SU blade, rated at 8.7 m^3 (11.4 yd^3), and the 8U blade at 11.7 m^3 (15.3 yd^3) make full use of the D8R's power. The 8A blade rated at 4.7 m^3 (6.1 yd^3) is designed for side casting, backfilling and other utility applications.

Single lever controls all blade movements.

Cutting edges are DH-2 steel. End bits are DH-3 to provide maximum service life in tough materials.

2 Rippers. Single and multi-shank rippers are made to penetrate tough material fast and rip thoroughly.

Hydraulic pitch adjustment cylinders vary the shank angle to get best penetration so the rock is lifted and shattered.

Operator can adjust the shank from the seat using an optional single shank pin puller.

Multi-shank ripper tailors the tractor to the material by using one, two or three shanks.

Load Sensing Hydraulics

Adjusts implement and hydraulic power to increase both operator and machine efficiency.

Load-sensing hydraulics utilize a feedback loop from the implement valve to the implement pump to continually monitor the hydraulic power requirements of the implement.

During normal blade or ripper corrections, pump output increases and decreases to provide precise power for dozing or ripping.

Lower pump requirements reduce engine power requirements for the hydraulics, making more drawbar power available for increased machine production.

Serviceability

Ease of service and maintenance gives you more time on the job.

Built-in servicing ease. Less service time means more working time. Major components are made as modules and most can be removed without disturbing or removing others.

Ecology drains provide an environmentally safer method to drain fluids. They are included on the radiator, hydraulic tank and major power train components.

Spin-on fuel and engine oil filters save changing time. Further time is saved with fast fuel and quick oil change attachments. Equipped with a dozer and ripper, the D8R has only 18 lube points.

AMOCS individual cooling elements allow radiator servicing without major component removal, saving considerable time and cost.

A diagnostic connector allows the Cat Dealer's electronic test instrument to quickly troubleshoot the electrical system.

Quick disconnect fittings allow for fast diagnosis of the power train and implement oil systems.

Complete Customer Support

Caterpillar's dealer commitment is unrivaled in the industry.

Dealers committed to fast, quality customer support. Your Cat dealer's investment in service begins with the fastest and most complete parts availability in the industry. The full range of exchange components and Caterpillar Remanufactured parts is aimed at saving you time and money, while carrying new-parts warranty.

Dealer service response extends to programs such as Custom Track Service (CTS), Scheduled Oil Sampling (S·O·S), and guaranteed maintenance contracts that get peak life and performance from your machine.

Your dealer is also expert at arranging affordable lease, rental or purchase financing for all Caterpillar products.

Engine

Four-stroke cycle, 3406C turbocharged and aftercooled diesel engine.

Ratings at 2100 RPM*	kW	HP
Gross power	245	328
Flywheel power	228	305

The following ratings apply at 2100 RPM when tested under the specified standard conditions for the specified standard:

Net power	kW	HP	PS
Caterpillar	228	305	—
ISO 9249	228	305	—
SAE J1349	226	302	—
EEC 80/1269	228	305	—
DIN 70020	—	—	317

Dimensions

Bore	137 mm	5.4 in
Stroke	165 mm	6.5 in
Displacement	14.6 liters	893 cu in

Power Shift with Differential Steer

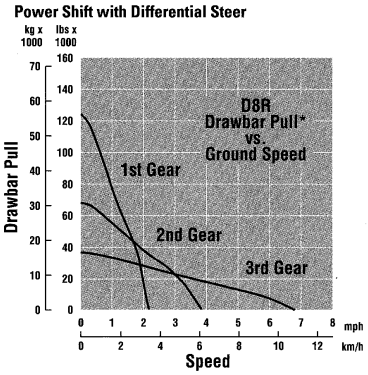

***Power rating conditions**

- based on standard conditions of 25°C (77°F) and 99 kPa (29.32 in Hg) dry barometer
- used 35° API gravity fuel having an LHV of 42,780 kJ/kg (18,390 Btu/lb) when used at 30°C (86°F) [ref. a fuel density of 838.9 g/L (7.001 lb/ U.S. gal)]
- net power advertised is the power available at the flywheel when the engine is equipped with fan, air cleaner, muffler and alternator
- no derating required up to 2286 m (7500 ft) altitude

Features

- direct-injection fuel system with individual, adjustment free injection pumps and valves
- cam-ground and tapered, aluminum-alloy pistons with three keystone-designed rings, each cooled by oil spray
- steel-backed, copper-bonded, aluminum bearings, through-hardened crankshaft journals
- pressure lubricated with full-flow filtered and cooled oil
- dry-type air cleaner with primary and secondary elements
- 24-volt, direct-electric starting system, 50-amp alternator
- engine/torque divider module is isolation mounted to the main frame reducing machine vibration and structure-radiated noise
- water cooled turbocharger bearing for longer life

Transmission

Planetary power shift with three speeds forward and reverse.

Maximum travel speeds

Speed		km/h	MPH
Forward	1	3.5	2.2
	2	6.2	3.9
	3	10.8	6.7
Reverse	1	4.7	2.9
	2	8.1	5.0
	3	13.9	8.6

Features

- single stage torque converter with output torque divider
- special modulation system permits fast speed and direction changes
- 345 mm (13.6") diameter, high torque capacity oil clutches
- modular transmission and bevel gear plug into rear of main drive case
- one oil-to-water cooler mounted under radiator

Torque Divider

A single stage torque converter with output torque divider.

Features

- 70% of engine torque through the converter, 30% through a direct drive shaft
- torque divider shields the driveline from sudden torque shocks and vibration

Final Drives

Crown-shaved, two-stage planetary, in-line final drive gears.

Features

- splash lubricated and sealed with Duo-Cone floating ring seals
- sprockets have five bolt-on, replaceable rim segments

Sealed and Lubricated Track

Coats the track pin with a sealed-in lubricant.

Pitch	216 mm	8.5"
Number shoes/side		44
Shoe type	Moderate service	
Width of shoe	560 mm	22"
Length of track on ground	3200 mm	10'6"
Ground contact area	3.6 m^2	5544 in^2
Grouser height (from ground face of shoe)	78 mm	3.1"
Ground clearance	528 mm	20.8"
Gauge	2083 mm	6'10"

Features

- lubricant reduces internal bushing wear
- hydraulic track adjusters, track guiding guards and large, positive-clamping, two-piece master link are standard

Service Refill Capacities

	L	U.S. Gallons
Fuel tank	625	165
Cooling system	92	24.3
Diesel engine crankcase	32.5	8.6
Power train	144	38
Final drives (each)	14	3.7
Roller frames (each)	65	17.2
Pivot shaft compartment	40	10.6
Implement hydraulic system tank only	72	19

Brakes

Meets the following standard:
SAE J1026 APR90

- single pedal simultaneously applies brakes to tracks for fast stops
- parking brake applied by transmission lock lever

Track Roller Frame

Lifetime Lubricated rollers and idlers resiliently mounted to roller frame by a series of bogies.

Features

- tubular design resists torsional loads
- bogies oscillate on sealed and lubricated cartridge pin connections, travel controlled by resilient pads
- roller frame attaches by a pivot shaft and fully pinned equalizer bar
- eight rollers per side
- large pivot bushings operate in an oil reservoir
- equalizer bar-roller frame ball joint pins are sealed and lubricated; saddle connection is a low-friction, no-maintenance bushing
- recoil system is fully sealed and lubricated
- oscillation (includes front and rear idler oscillation) of 398 mm (15.7") for the suspended undercarriage and 343 mm (13.5") for the nonsuspended undercarriage option and ±3.0° at pivot shaft for both undercarriages

Steering

Differential Steer features

- dual twist tiller controls all direction movement
- twist grip controls forward/reverse direction
- tiller controls left-hand/right-hand turns
- speed selection is accomplished by rotating the knob located on the end of the tiller control

Cab

Caterpillar cab is optional and Rollover Protective Structure (ROPS) is standard.

Features

- meets OSHA and MSHA limits for operator and sound exposure with doors and windows closed (according to ANSI/SAE J1166 JUL87)
- ROPS meets the following criteria:
  SAE J394
  SAE 1040 APR88
  ISO 3471-1986
- also meets the following criteria for Falling Objects Protective Structure (FOPS):
  SAE J231 JAN81
  ISO 3449-1984

NOTE:
When properly installed and maintained, the cab offered by Caterpillar when tested with doors and windows closed according to ANSI/SAE J1166 MAY90, meets OSHA and MSHA requirements for operator sound exposure limits in effect at time of manufacture. The operator sound pressure level is under 85 dB(A) when measured per ISO 6394 or 86/662/EU.

Weight (approximate)

Shipping (includes lubricants, coolant, 20% fuel and ROPS canopy)
27 380 kg (60,240 lb)

Operating (includes lubricant, coolant, full fuel tank, hydraulic controls and fluids, back up alarm, seat belts, lights, front towing device, 560 mm (22") moderate service shoes, optional equipment [8 U bulldozer, single shank ripper, ROPS/FOPS cab] and operator)
37 594 kg (82,880 lb)

Dimensions

All dimensions are approximate.

With attachments add to overall machine length:		
Single Shank ripper	1576 mm	5'2"
Multi-shank ripper	1623 mm	5'4"
Drawbar	325 mm	12.8"
8 SU Dozer	1438 mm	4'9"
8U Dozer	1835 mm	6'1"
8A Dozer	1621 mm	5'4"

Width over trunnions	3050 mm	10'0"
Drawbar height (centerline of clevis) from ground face of shoe	674 mm	26.5"

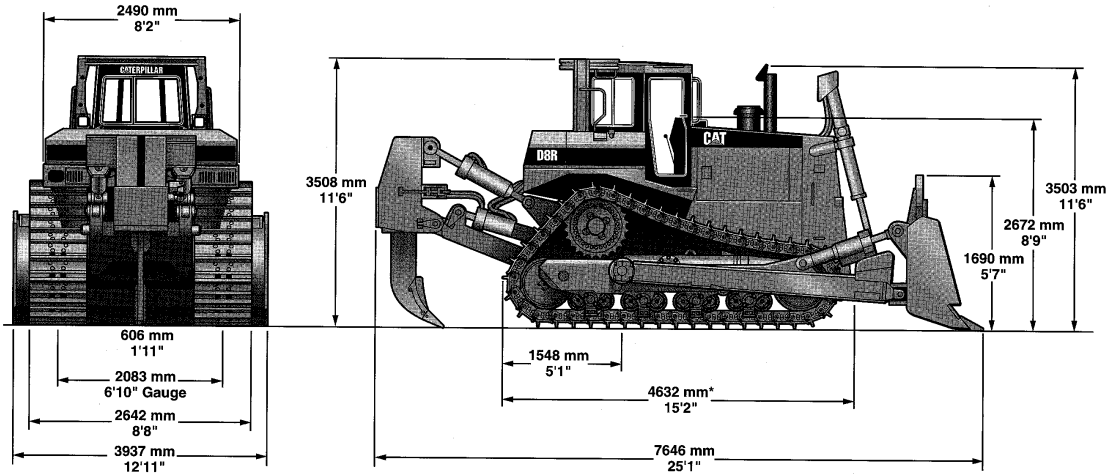

*Note: Overall machine length is from tag link trunnion to end of standard track

Hydraulic Controls

Complete system consists of pump, tank with filter, oil cooler, valves, lines, linkage and control levers.

Steering - Piston-type pump geared from flywheel Output at 2500 RPM and 38 000 kPa (3774 psi)	300 liters/min	79 gpm
Implements - Piston-type pump geared from flywheel Output at 2100 RPM and 7 000 kPa (1000 psi)	239 liters/min	63 gpm
Tilt cylinder rod end flow	130 liters/min	34 gpm
Tilt cylinder head end flow	160 liters/min	42 gpm
Relief valve settings		
Bulldozer	24 100 kPa	3500 psi
Tilt Cylinder	24 100 kPa	3500 psi
Ripper (Lift)	24 100 kPa	3500 psi
Ripper (Pitch)	24 100 kPa	3500 psi

Control valve positions	
Bulldozer	raise, hold, lower, float
Tilt Cylinder	tilt right, hold, tilt left
Ripper (Lift)	raise, hold, lower
Ripper (Pitch)	extend, hold, retract
Reservoir	
Tank Capacity	72 liters (19 gal)

16 **D8R Track-Type Tractor** specifications

Rippers

Hydraulic tip adjustment cylinders vary shank angle to aid penetration and help lift and shatter rock.

		Single Shank	Single Shank, Deep Ripping Arrangement	+Multi-Shank Arrangement
Overall beam width	mm	–	–	2462
	ft/in	–	–	8'1"
Maximum penetration force* (shank vertical)	kN	127.4	127.9	124.2
	lb	28,620	28,760	27,920
Maximum penetration (standard tip)	mm	1135	1574	788
	ft/in	3'9"	5'2"	2'7"
Pryout force* (multi-shank ripper with one tooth)	kN	222.8	220.9	227.9
	lb	50,070	49,660	51,230
Maximum clearance raised (under tip, pinned in bottom hole)	mm	635	635	593
	in	25"	25"	23.3"
Number of shank holes		3	5	2
Weight (without hydraulic controls)	kg	4085	4260	4213
	lb	9,005	9,391	9,287
Total operating weight** (with 8 U blade and ripper)	kg	37 594	37 771	37 722
	lb	82,880	83,270	83,162

* Specifications are converted from British to metric measure and rounded.
** Operating weight includes lubricant, coolant, full fuel tank, hydraulic controls, 560 mm (22") moderate service shoe, ROPS/FOPS cab, and operator.
\+ Includes one shank. Add 332 kg/730 lb for each additional shank.
Note: Single shank, deep ripping arrangement weight includes required pin puller.

Features

- optional single shank pin puller lets operator adjust shank length from seat
- multi-shank ripper allows variable use of one, two or three shanks to match job conditions

Winch Specifications

Weight	1878 kg	4,140 lb
Increased tractor length	163 mm	6.4"
Winch case width	1220 mm	48"
Flange diameter	550 mm	21.5"
Drum width	310 mm	12.5"
Drum diameter	305 mm	12"
Recommended Cable size	25 mm	1.00"
Optional Cable size	29 mm	1.13"
Drum Capacity		
recommended cable	73 m	239'
optional cable	58 m	190'
Oil Capacity	81 L	21.5 gal
Maximum/ferrule size (OD x Length)	60 mm x 70 mm	2.38" x 2.75"

Bulldozers

Tag link dozer coupling brings blade closer for better balance and control.

Blade		8 SU	8 U	8 A
Blade capacity (SAE J1265)	m^3	8.7	11.7	4.7
	yd^3	11.4	15.3	6.1
Width with blade (over end bits)	mm	3937	4262	4978
	ft/in	12'11"	14'0"	16'4"
Blade height	mm	1690	1740	1174
	ft/in	5'7"	5'9"	3'10"
Digging depth	mm	582	582	628
	in	22.9	22.9	24.7
Ground clearance	mm	1231	1231	1308
	ft/in	4'0"	4'0"	4'4"
Maximum tilt	mm	951	1028	729
	ft/in	3'1"	3'5"	2'5"
Weight*	kg	4570	5135	5099
	lb	10,074	11,320	11,241
Total operating weight**(with blade)	kg	32 945	33 509	33 475
	lb	72,630	73,875	73,800

* Does not include hydraulic controls, but includes blade tilt cylinder.
** Includes hydraulic controls, blade tilt cylinder, coolant, lubricants, full fuel tank, ROPS/FOPS cab, 560 mm (22") moderate service track and operator.

Features

- cutting edges are DH-2 steel and end bits are DH-3 steel for maximum durability
- dozer lift cylinders mount to top corners of radiator guard to improve mechanical advantage
- single lever controls all blade movements
- angle dozer available with two tilt cylinders, which replace the two tilt braces

Standard Equipment

Standard and optional equipment may vary. Consult your Caterpillar dealer for specifics.

Advanced Modular Cooling System (AMOCS)
Adjustable Contour Series Suspension Seat
Air cleaner
Air cleaner service indicator
Alternator, 50-amp
Back up alarm
Batteries (4), 12-volt, 3,000CCA
Blower fan
Decelerator and hand throttle lever
24-volt direct electric starting
Ecology drain on engine oil, engine coolant, torque converter, transmission, powertrain oil and hydraulic system
Electric hour meter
Electronic Monitoring System (EMS) (coolant flow, coolant temperature, engine oil pressure, transmission oil temperature, transmission oil filter, alternator and hydraulic oil filter) and Gauge Group (engine coolant temperature, power train oil temperature, hydraulic oil temperature and fuel level)
Ether starting aid
Front pull device
Front action horn
Fuel priming pump
Hinged extreme service crankcase guard
Hinged radiator and blast deflector guards
Hydraulic control, three valve
Hydraulic track adjusters
Implement control lever boots
Implement control lever restraints
Lifetime Lubricated rollers and idlers
Lighting system, Halogen (two lights forward in fender, two rear on fuel tank)
Load sensing hydraulics
Muffler
Pinned equalizer bar
Power shift transmission
Pre-cleaner with dust ejector
Prescreener
Rain cap
Rearview mirror
Replaceable sprocket rim segments
ROPS/FOPS canopy (USA)
Sealed and Lubricated Track
Seat belt (retractable)
Starting receptacle
Suspension-type undercarriage with eight roller track frames
Track guiding guards
Two-piece master links
560 mm (22") moderate service grouser tracks (44 section)
Vandalism protection includes cap locks for fuel tank, engine oil filler, radiator filler and dip stick, plus battery box locks (two) and left hand service area cover lock

Optional Equipment

(with approximate change in operating weight)

	kg	lb
Air conditioner (R134a)	57	125
Air conditioner, fender mounted	160	351
Air conditioner, ROPS mounted	154	339
Angle dozer tilt cylinders	311	685
Bulldozers:		
Rock guard and wear plate (for 8 SU Blade only)	552	1,214
Rock guard (for 8 U blade only)	115	253
Pushplate (for 8 SU blade only)	234	515
Cab, FOPS sound suppressed, with ROPS rollbar (includes heater, cab accessory group and mirror) (add weight to standard tractor without cab)	550	1,210
Canopy, ROPS/FOPS, includes mirror (standard, USA)	-502	-1,104
Counterweight:		
*Rear mounted (basic)	2335	5,137
*Rear mounted (additional weight)	572	1,258
Engine enclosure	57	126
Fan, reversible	6	13
Fast-fill fuel system	7.5	16.5
Fast oil change system for quick service to engine and transmission	5	11
Guards		
Fuel and hydraulic tank	256	563
Rear power train	129	284
Radiator, hinged, heavy duty	148	326
Rear tractor	74	163
Heaters		
Fuel	5	12
Engine coolant	2	4.4
Laminated Thermo-shield	11	24

	kg	lb
Light, rear (for use with ripper)	1	2.2
Non-suspended undercarriage	-1330	-2,933
Operator arrangement, modified (improved visibility and comfort for smaller operators)	25	54
Radiator core protector grid	11	25
Rigid drawbar	288	634
Rear screen (with cab)	86	190
Rear screen (with canopy)	65	143
*Rippers		
Single shank - Standard arrangement	4085	9,005
Single shank - Deep ripping (includes shank, pin puller)	4260	9,391
Multi-shank (includes one shank)	4213	9,287
Ripper shank (for multi-shank ripper)	332	733
Pin puller, hydraulic (for single shank)	98	216
Sweeps, logging	310	682
Tracks, pair, Sealed and Lubricated:		
610 mm (24"), Moderate Service	200	440
660 mm (26"), Moderate Service	402	886
710 mm (28"), Moderate Service	602	1,324
560 mm (22"), Extreme Service	329	724
610 mm (24"), Extreme Service	569	1,252
Track roller guard (non suspended)	299	660
Waste disposal arrangement	817	1800
*Winch arrangement	1878	4,140

*A rear attachment and/or counterweight is recommended for improved balance and performance.

NOTE: All specifications are converted from metric to British measure and rounded, unless otherwise specified.

Appendix C: Caterpillar D8R Track-Type Tractor Brochure

DOE-Provided Contingency Ranges

Contingency Allowances for Current Working Estimates
Construction Projects

	Item Contingency On Remaining Cost Not Incurred
a. ENGINEERING	
Before Detailed Estimates:	15% - 25%
After Detailed Estimates:	10%
b. EQUIPMENT PROCUREMENT	
Before Bid:	
Budget	15% - 25%
Title I	10% - 20%
Title II	5% - 15%
After Award:	
Cost Plus Award Fee (CPAF) Contract	15%
Fixed Price Contract	1% - 5%
After Delivery to Site (if no rework)	0%
c. CONSTRUCTION	
Prior to Award:	
Budget	15% - 25%
Title I	10% - 20%
Title II	5% - 15%
After Award:	
CPAF Contract	15% - 17.5%
Fixed-Price Contract	3% - 8%
TOTAL CONTINGENCY (CALCULATED)	Total of above item contingencies

Source: Chapter 11, DOE G 430.1-1, *Cost Estimating Guide*, March 28, 1997.

DOE-Provided Contingency Ranges

Construction Projects

Unforeseen, uncertain, and unpredictable conditions will exist. Therefore, using the DOE cost code of accounts for construction, the following percentages are provided for planning and budget estimating and are listed in order of increasing complexity:

Land and Land Rights	5% - 10%
Improvements to Land/Standards Equipment	10% - 15%
New Buildings and Additions, Utilities, Other Structures	15% - 20%
Engineering	15% - 25%
Building Modifications	15% - 25%
Special Facilities (Standard)	20% - 30%
Experimental/Special Conditions	Up to 50%

The following considerations which affect the selection in the ranges: state-of-the-art design, required reliability, equipment complexity, construction restraints caused by continuity of operation, security, contamination, environmental (weather, terrain, location), scheduling, and other items unique to the project (e.g., nuclear and waste management permits and reviews).

Source: Chapter 11, DOE G 430.1-1, *Cost Estimating Guide*, March 28, 1997.

DOE-Provided Contingency Ranges

Contingency Allowances Guide By Type of Estimate
Construction Projects

Type of Estimate	Overall Contingency Allowances % of Remaining Costs Not Incurred
a. PLANNING [Prior to Conceptual Design Report (CDR)]	
Standard	20% - 30
Experimental/Special Conditions	Up to 50%
b. BUDGET (Based on CDR)	
Standard	15% - 25%
Experimental/Special Conditions	Up to 40%
c. TITLE I	10% - 20%
d. TITLE II DESIGN	5% - 15%
e. GOVERNMENT (BID CHECK)	5% to 15% adjusted to suit market conditions
f. INDEPENDENT ESTIMATE	To suit status of project and estimator's judgment

Source: Chapter 11, DOE G 430.1-1, *Cost Estimating Guide*, March 28, 1997.

DOE-Provided Contingency Ranges

Guidelines for Environmental Restoration Projects

Activity and Estimate Type	Expected Contingency Range
Contingency Guidelines for Assessment Phase	
Preliminary Assessment/Site Investigation Planning Estimate for All Assessment Activities	Up to 100%
Preliminary Estimate for All Assessment Activities	30% to 70%
Remedial Investigation/Feasibility Study Detailed Estimate for All Cleanup Phase Activities	15% to 55%
Planning Estimate for All Cleanup Phase Activities	20% to 100%
Contingency Guidelines for Remediation/Cleanup Phase	
Pre-Design Preliminary Estimate for All Remediation/Cleanup Phase Activities	Up to 50%
Remedial Design and Action Detailed Estimate for all remediation/cleanup phase activities	0% to 25%

This table shows the estimate types for the assessment and remediation phase of an environmental restoration project and their corresponding expected contingency ranges. No contingency ranges for planning estimates have been provided. The contingency becomes smaller as the project progresses and becomes better defined. Note, that these are only general guidelines based on the level of project definition. A higher or lower contingency may be appropriate depending on the level of the project complexity, technical innovation, market innovation, and public acceptance.

Source: Chapter 11, DOE G 430.1-1, *Cost Estimating Guide*, March 28, 1997.

Appendix D: DOE-Provided Contingency Ranges

EXAMPLES OF U.S. DEPARTMENT OF ENERGY PROJECT RISK AREAS

RISK FACTOR	LOW	MODERATE	HIGH
Technology	Conventional/off-the shelf Civil construction	Proven state-of-the-art engineered equipment Testing	Unproven/new highly-engineered equipment R&D requirements Extensive testing
Time	No known schedule constraints	Some schedule constraints but won't affect completion date	Schedule constraints/ compressed schedule
Interfaces	Little or no major impact from site operations, other contractors	Potential impact from site operations, contractors, projects, or programs	Potential **major** impact from site operations, contractors, projects or programs
Number of Key Participants	1	2-3	3 or more
Contractor Capabilities	Proven track record and resources available now	Limited experience or resource availability	New acquired capabilities or resources committed to other projects
Magnitude and Complexity of Contamination	Hazard/low level characterized waste	Hazard/moderately characterized	High-level/mixed waste
Regulatory Involvement	Minimal permit requirements, NEPA, CX	Routine permit requirements multiple agencies, NEPA, EA	Unique permit requirements, multiple agencies at different levels of government, NEPA, EIS

Source: *Cost and Schedule Estimator and Analysis (PMMS2)*, U.S. Department of Energy Professional Skills Training, February 20, 1997.

RISK FACTOR	LOW	MODERATE	HIGH
Site Characteristics	1 site	2-3 sites	4 or more sites
	DOE property	Government property	Private property
	Accessible	Accessible	Restricted access
	No required infrastructure	Minor infrastructure	Major infrastructure
Labor	Low to moderate skill, readily available, gradual build up, low productivity requirement	Moderate/high skill, restricted availability, measured/phased build up, moderate productivity required	Moderate/high skill, severely restricted availability, rapid build up, high productivity
Quality Requirements	Large tolerances	Moderate tolerances	Precision work
	Low productivity risk	Moderate risk	High risk
Political Visibility and Public Involvement	None	Minor	Major or independent oversight
Funding	General plant project Size -- less than 1 year duration	Line item size 2-3 year duration	Strategic system or large line item size 3 or more years

Source: *Cost and Schedule Estimator and Analysis (PMMS2)*, U.S. Department of Energy Professional Skills Training, February 20, 1997.

TYPICAL PROJECT RISKS

Common general project risk situations encountered:

- The project sponsor (and the project manager) do not recognize that every project is an exercise in risk.
- When the project is in its earliest phase, project risk and opportunity are highest (but the amount at stake is lowest).
- The project scope, objectives and deliverable ate not clearly defined or understood.
- Some or all technical data is lacking.
- The technical process (and design) are not mature.
- Standards for performance are unrealistic (the best there is for everything) or are absent.
- Cost, schedules, and performance are not expressed ranges.
- The future timing of activities and events are vague.
- Design lacks production engineering input.
- Prototype of a key element is missing.
- There is a higher than usual R&D component.
- Some or all environmental permits are outstanding.
- Other similar projects have been delayed or canceled.
- Some key subsystems and/or materials are sole source.
- No appropriate contingency plans have been developed.
- The project team relies entirely on the contingency allowance.

External Unpredictable (and uncontrollable)

a. Regulatory, i.e., unanticipated government intervention in:
   - supply of raw materials
   - environmental issues
   - design standards
   - production standards
   - site location
   - product or service sales or export
   - pricing
   - special requirements
b. Natural Hazards, i.e., as a result of natural elements:
   - location
   - storm
   - flood
   - earthquake
c. Postulated Events, i.e., as a result of deliberate intent:
   - vandalism
   - sabotage
d. Indirect Effects, i.e., occurring as a result of the project:
   - environmental
   - social
e. Completion, i.e., failure to complete the project on account of one of the following:
   - failure of the supporting infrastructure as a result of others
   - failure of design, execution or supply contracts due to bankruptcy or receivership, etc.
   - failure to provide financial support to the end of the project
   - inappropriate project concept or configuration
   - political unrest

- lack of final acceptance

Source: *Project and Program Risk Management*, Project Management Institute, 1992.

External Predictable (but uncontrollable)

Changes in the following are predictable, but the extent and direction is uncertain.

a. Market Risks
   - availability of raw materials
   - cost of raw materials
   - demand, including consumer/user rejection
   - economics
   - competition
   - end value in the market
   - willingness of buyers to honor purchases agreements
b. Operational, i.e., after project completion
   - maintenance needs
   - fitness for purpose
   - safety
c. Environmental Impacts
d. Social Impacts
e. Current Changes
f. Inflation
g. Taxation

Internal, Non-Technical (but generally controllable)

a. Management, i.e., difficulties due to:
   - insincerity/lack of integrity
   - incapacity
   - inadequacies
   - loss of control
   - incompatibility of goals
   - senior staff changes
   - inappropriate or lack of organizational structure
   - lack of appropriate policies and procedures
   - inadequate planning
   - unrealistic goals
   - lack of coordination
   - inadequate project management
b. Schedule, i.e., delays and time overrun due to:
   - delays due to management difficulties above
   - regulatory approvals
   - labor shortages
   - labor productivity
   - labor stoppages
   - material shortages
   - late deliveries
   - unforeseen site conditions
   - sponsor/user scope changes
   - accident or sabotage
   - start-up, turn-over or launch difficulties
   - lack of access

Source: *Project and Program Risk Management*, Project Management Institute, 1992.

c. Cost, i.e., overruns due to:
   - any of the schedule delays listed above
   - inappropriate procurement strategy
   - pay negotiations
   - management and/or workforce inexperience
   - lack of understanding how parts fit together
   - contractor claims
   - under-estimating
   - any of the external factors listed previously
d. Cash Flow
   - squeezing
   - interruption
   - insolvency
e. Loss of Potential, i.e., removal of:
   - benefit
   - profit

Technical (and generally controllable)

a. Changes in Technology
   - rendering parts of the project obsolete
   - parts discontinued
   - introduction by competitors, rendering the project obsolete, uncompetitive, or unacceptable
   - complexity introduced as a result of new technology
b. Performance
   - quality
   - rate of production
   - reliability
c. Risks Specific to Project's Technology
   - inadequate data
   - designer/detailer inexperience
   - design inadequacies
   - detail, precision, and suitability of the specification
   - likelihood of changes during the course of the project
   - design vs. execution methods
d. Sheer size or complexity of project

Legal (generally controllable)

Difficulties arising from any of the following:

a. Licenses
b. Patent Rights
c. Contractual, i.e., difficulties due to:
   - misinterpretation
   - misunderstanding
   - inappropriate contracting strategy/contract type
   - failure

d. Outsider Suit
e. Insider Suit
f. Force Majeure

Source: *Project and Program Risk Management*, Project Management Institute, 1992.

PROJECT VALIDATION GUIDANCE CHECKLIST

Traditional DOE Construction Project

This validation checklist was established for traditional DOE construction projects to use for ER project modify on adjust as appropriate.

The objective project validation is to examine the planning, technical/cost/schedule baselines and project management to ensure that the project is ready to proceed and the baselines are consistent with programmatic needs, goals, and legal requirements. This also ensures the funds being requested for the project are commensurate with the scope and schedule being proposed.

General

__1. Where necessary, has agreement been reached between the program division, field office, and/or operating contractor on the facility operating (performance) requirements?

__2. Are facility requirements defined in terms of real property requirements, process definition, arrangement, system layout, operations, maintenance, utility supply, distribution, and cost?

__3a. Has DOE Order 6430.1A been used in developing the Conceptual Design Report (CDR)?

__3b. For areas not covered by DOE Order 6430.1A, what criteria are used?

__3c. Has the intention to conduct a DOE 6430.1A compliance analysis and review been expressed? (Required per DOE Order 5481.1B, Safety Analysis and Review System).

__4a. Have safeguards and security requirements been considered in the development of the CDR?

__4b. Have they been reviewed and accepted by safeguard and security personnel, and are they in accordance with the latest Master Safeguards and Security Agreement?

__5a. A site plan(s) of the project shall be forwarded for review by the validator. Is the project location predetermined by existing facilities or is site selection necessary?

__5b. What is the basis for the site selection and what alternatives were considered?

__5c. Is the project site shown on the current approved baseline plan from the Technical Site Information?

__5d. If not, has an Engineering Control Change to the baseline plan been completed, approved by the DOE Field Offices, and distributed to HQ?

__5e. If land acquisition is required, has the implementation of DOE Order 4300.1 been initiated?

__6a. Are function of structures, systems, and major components defined?

__6b. Have value engineering techniques been utilized to analyze these functions?

__7. Has the procurement strategy been coordinated with HQ Procurement Operation staff?

__8a. Have facility demands been matched with site utilities, roads, and support facilities?

__8b. Will utilities, roads, and/or support facilities require future upgrades/modification to match infrastructure demand?

Source: Environmental Project Manager's Handbook for Improved Project Definition, U. S. Department of Energy, February, 1995.

__9. Have requirements for initial complement of equipment been defined?

__10. Are quality levels and program requirements established?

__11. With present knowledge of the proposed facility, can emissions and wastes be treated or disposed of in compliance with Federal and State standards?

__12. Have state, local, or national codes and standards applicable to the work and operation of the facility been defined; can the facility operate within these codes and standards?

__13. Does facility provide office space for operating staff and does the amount of space conform to guidelines issued by General Services Administration?

__14a. Are space requirements in addition to current space available, or is it replacement for substandard space?

__14b. What is the disposition of the building/space being replaced, demolished, converted, etc.?

__15. Doe projects meet the SEN-15-90, NEPA requirements, or have Environmental Assessment (EA), been prepared, as required by the Assistant Secretary for Environment, Safety and Health?

__16. Have the requirements been met for ensuring that new DOE facilities demonstrate new or emerging energy efficient technologies as presented in DOE notice 4330.0?

__17. Have Construction Project Data Sheets been submitted for “Operation Expense Funded” projects over $1.5 Million and, in particular, those that are listed as Major System Acquisitions (replaced by Strategic Systems)?

Design (Conceptual, Title I, Title II)

__1. What is the status of the design? The engineering must be developed to the point of establishing initial scope, cost, and schedule baselined at CDR. The following should be included as part of the design documents:

- __ Site development plans including utilities
- __ Building layouts
- __ Major equipment arrangement
- __ Piping and instrumentation diagrams
- __ Piping and heating, ventilating, and airconditioning layouts
- __ Electrical single-line diagrams
- __ Major mechanical, electrical, and experimental equipment list with sizing and codes, standards, Quality Assurance (QA), and other principal special provisions
- __ Most reasonable utility supply option selected
- __ Utility requirements impacts; availability of outside sources; the most reasonable utility supply option selected
- __ DOE 6430.1A compliance analysis and review

__2a. Have there been any scope changes since the last validation?

Source: Environmental Project Manager's Handbook for Improved Project Definition, U. S. Department of Energy, February, 1995.

__2b. If so, have rationale, costs and schedule impact been identified?

__3. Are site conditions understood (e.g., legal encumbrances and restrictions, soil borings, water table, borrow and spoil areas, railroad bridges and road access, utility sources and routing restrictions, construction site layout and limitations)?

__4. Have safety hazards and risks been determined and have appropriate safety evaluations been performed?

__5. Has the design undergone a value engineering study, and if so, have design alternatives been incorporated which are life-cycle cost effective?

__6a. Has an environmental assessment been performed?

__6b. What is the status of environmental documentation?

__7. Has Research and Development (R&D) prerequisite to facility design and construction been identified, scoped, scheduled, and funded?

__8. Have all those who could influence the design participated in development/preparation and approval of the concept?

__9a. What are major areas of uncertainty (e.g., R&D, design feasibility, schedule, etc.)?

__9b. Has this been factored into the risk assessment to determine the contingency?

__10. Has the Energy Conservation Report as required by DOE Order 6430.1A been prepared as a part of the design?

__11. For applicable buildings, or building areas, does design meet Title 10, Code of Federal Regulation Part 435, Energy Conservation Voluntary Performance Standards for Commercial and Multi-Family High Rise Residential Buildings, mandatory for new Federal Buildings?

__12. Have maintainability considerations been built into the design, and does the design contain a good maintainability checklist specifically oriented to the project? The maintainability concerns that should be addressed are:

__ a.Accessibility
__ b.Operator/user friendly
__ c.Documentation
__ d.Standardization/interchangeability
__ e.Flexibility
__ f.Desirable levels of quality

Source: Environmental Project Manager's Handbook for Improved Project Definition, U. S. Department of Energy, February, 1995.

Schedule

Have the following factors been considered in developing the schedule:

__ Effects of weather and season
__ Resource loading and leveling
__ Milestone responsibilities (AE, program, project, contractor)
__ Budget cycle timing
__ Contractor selection durations
__ Headquarters reviews and approvals (including NEPA and Safety)
__ Prerequisite R&D schedule constraints
__ Dependency upon timing and amount of operating funds
__ Historical experience on design, procurement, construction, technical reviews, National Environmental Policy Act documentation etc.
__ Development of environmental documentation
__ Procurement lead times for equipment (particularly reflecting vendor quotes)
__ Logical sequence of design, procurement, and construction
__ Realistic obligation and costing rates
__ Workplace space constraints
__ Exposure constraints
__ Operational Constraints
__ Maintainability reviews and deliverables
__ Milestone dictionary

Cost Estimate

Details provided should be consistent with complexity, scope, nature (first-of-a-kind vs. repetitive), and status of the design (conceptual, Title I/II, etc.). Cost estimates and summaries should be understandable and be provided in a single volume if possible. Computerized CS^2 reports are not acceptable. Provide assumptions, basis of the estimate and narrative as required to furnish complete explanations. For major technical projects, the following estimating practices are pertinent:

General

__1a. When was estimate prepared?

__1b. Are estimates provided in both base year and then year dollars?

__2. Basis of estimate: vendor quotes, similar projects, engineering calculations, etc.

__3. Are estimates traceable and supportable, where necessary, with vendor quotes?

__4a. Do contingency and escalation reflect the guidance issued (Cost Estimating Guide for Application of Contingency, Note Contingency Guideline Implementation, Paragraph 5.b.)?

__4b. Does contingency reflect level of confidence in scope of work, development features, pricing methodology and complexity of project?

__4c. Does contingency analysis provide for varying degrees of certainty in the estimate?

Source: Environmental Project Manager's Handbook for Improved Project Definition, U. S. Department of Energy, February, 1995.

__5a. What escalation rates are being used?

__5b. What documentation or analysis was used to support these assumptions?

__5c. Have they been included and applied in a logical and consistent manner?

__5d. What changes in estimates have occurred as a result of changes in escalation assumptions used in previous estimates?

__5e. Have program-related changes been identified and crosswalked (schedule, technical, scope, or economic condition)?

__6a. Have there been independent reviews of the project estimate?

__6b. When was the estimate updated?

__6c. How was the estimate updated (i.e., trends “bottoms-up,” only changed work, etc.)?

__6d. When was last “bottoms-up” estimate performed?

__7. Where unique construction or fabrication practices are required, has pricing advice been obtained from experienced firms knowledgeable in the field?

__8. Where attempts are made to use estimating guides based on conventional construction items, have they been properly interpreted with required geographic, quantity, and complexity adjustments?

__9a. Are indirect costs, profit, fees, etc., included?

__9b. Are reasonable rates used?

__9c. Have these been audited?

__10. In the case of Title I/II design estimate, were all the specification and drawings available for development of the cost estimate?

__11. Are all required experimental components included in estimate?

__12. Has a procurement strategy been developed, i.e., Government Furnished Equipment, Cost Sharing, Cost-Plus-Fixed-Fee, Cost-Plus-Award-Fee, etc., for contracts and major cost items?

__13. Are materials and systems selections, especially as they concern maintainability, based on life-cycle costs rather than first costs identified?

__14a. Have Total Estimated Cost and Total Project Cost definitions been properly applied?

__14b. Do the estimates reflect proper financial management practices and procedures?

Source: Environmental Project Manager's Handbook for Improved Project Definition, U. S. Department of Energy, February, 1995.

Construction

__1. Were bulk material quantities, established by takeoffs from conceptual drawings, based on engineering estimates or factored from previous work?

__2. Are allowances for quantity growth needed or provided?

__3. Is bulk material pricing current and reflecting local conditions where appropriate?

__4a. Is labor estimated using local rates, including applicable fringe benefits, travel allowance, and reasonable crew or craft mix?

__4b. Was the availability of construction labor critical skill categories in the local labor market considered?

__5. Is pricing of equipment supported by current vendor quotes or recent actual experience?

__6. Have indirect construction costs been included for normal support, field engineering, temporary construction, mobilization, warehousing, etc.?

__7. Is labor productivity based on historical experience adjusted or appropriate for site or unusual facility features?

__8a. If labor availability would be a problem, have allowances been included for attracting adequate work force?

__8b. Have construction of classified projects been addressed relative to cleared work force?

__9. Does pricing reflect code, QA, scheduling, climatic, geographic, and other unique specification requirements?

__10. If unitized pricing has been applied, are the raw material and labor cost, equations and other backup data provided or available?

__11. Are operational cost estimates and basis for overhead cost included and explained?

__12. Has a transition plan from construction to operations been developed along with procedures for controlling costs?

Engineering and Management

__1. Do the Engineering, Design, and Inspection (ED&I) Costs follow the guidance, The Definition and Treatment of Engineering, Design, and Inspection Costs, August 23, 1985?

__2. Are contractor project management and engineering costs appropriately chargeable to the project included?

__3. Was ED&I built up by assessment of drawings, specifications, analysis, comparable experience, or a percentage of construction?

Source: Environmental Project Manager's Handbook for Improved Project Definition, U. S. Department of Energy, February, 1995.

__4. Are Title III inspection, QA, and QC costs included for Architect/Engineer, operator and construction, as appropriate?

__5a. Is the management system organized and planned reasonable and responsive to project/program needs?

__5b. Is authority at the proper levels?

__5c. Are there duplicative or overlapping responsibilities?

__5d. Is a cost and schedule deviation evaluation system in place?

__6a. Is an effective baseline change control system in place including board charters and responsibilities?

__6b. Are project baselines change procedures and process defined and understood?

Finding and Cost Status

__1a. What is the basis for the planned authorization, appropriation, and costing schedule?

__1b. What alternatives were considered?

__2. What are the other associated project costs? See Item 12 of Project Data Sheet for details desired.

__3a. Is the proposed annual funding consistent with a realistic project schedule?

__3b. Is it based on an evaluation of planned contract awards delivery lead times, and logical critical path activity sequencing?

__4. Have alternatives been considered in the event of a Continuing Resolution or reduced funding? Impacts?

__5. Are any of the fixed-price construction contracts in the project incrementally funded?

__6. Has the funding by client or consultant agencies been identified?

__7. Have any reductions in project funding or fundings requests resulted in the elimination or reduction of energy conservation or maintainability items?

Additional Specific Guidance for EM-40 Projects

The following is additional information relevant to the EM-40 validation process:

__1. A team approach will be used for the validation of EM-40 projects. The team will usually consist of members from GC/EH/PR/CR and contractor technical support personnel.

Source: Environmental Project Manager's Handbook for Improved Project Definition, U. S. Department of Energy, February, 1995.

__2. Validation material should be provided in a concise fashion, preferably in a single bound volume to all of the members of the validation team. Voluminous computer automated cost and schedule control system output reports are not accepted alternatives to a fully documented cost estimate report, which logically and coherently states all assumptions, basis for the estimate, and explanatory narrative.

__3. One of the primary areas of emphasis during the project validation reviews shall be the requested funding for the project. The validation teams shall examine Current Fiscal Year (FY), budget year (FY+1), and requested year (FY+2) for the project. The team will pay particular attention to both Budget Authorization (BA), obligations and cost accrual cumulative funding and funding carry-over (both unobligated BA and uncosted obligations). All funding profiles shall address both TEC and Other Project Cost (OPC) to obtain the Total Project Cost.

Source: Environmental Project Manager's Handbook for Improved Project Definition, U. S. Department of Energy, February, 1995.

Practical Cost-Estimating and Validation
Lessons Learned Workshop
Additional Lessons Learned Questions

Project Scope

___ Is the project scope available?

Does the scope reflect/address

- ___ All available site information?
- ___ Technical approach?
- ___ Regulatory requirements?
- ___ Cost- and schedule-control opportunities?

Does the project/task scope include

- ___ Description of the work to be performed?
- ___ End condition or end product of work?
- ___ Performance criteria and requirements?
- ___ Discrete tasks and deliverables?
- ___ Performance methodology and task plans?

___ Are the major assumptions used in developing the project scope clearly identified and justified in the documentation? (The ground rules and assumptions may be identified in documents separate from the estimate.)

___ Does the documentation include the rationale used to develop task descriptions, logic diagrams, milestones, and resource requirements?

___ Does the project scope documentation include specific activities associated with the work to be performed and activity-based resource descriptions?

___ Does the project scope documentation include descriptions of support activities (e.g., health and safety, quality assurance, security) associated with the work to be performed?

Project Scope

___ Has the project scope been developed at the lowest possible level of Work Breakdown Structure (WBS)/Code of Accounts (COA)?

___ Do the U.S. Department of Energy (DOE) and contractor management place a strong emphasis on project/task scope?

___ Do the individuals responsible for preparing cost estimates place a strong emphasis on project scope?

___ Are project scopes formally updated?

___ Are update logs used? What information is provided in these logs?

___ Can the project scope be traced back to the original authors/reference materials? How?

___ Does the project scope assign responsibilities?

___ Does the project scope reflect the project/task WBS elements?

___ Is there a WBS activity dictionary?

___ As appropriate, does the project scope contain a technical logic diagram and/or process flow diagram?

___ How is the scope creep addressed in cost estimates? Does everyone consider this issue? How should it be addressed?

___ What part does cost estimating play in technology evaluation? What part should it play? How are new innovative technologies estimated? What kinds of potential improvements are possible?

Schedules

___ Are the organizational units that perform the schedule-estimating functions identified on the organizational chart?

___ Do formal directives/procedures define the schedule-estimating authorization, implementation, review, and approval processes?

___ Does management support the formal scheduling process as defined by current directives?

___ Is the formally defined schedule-estimating process followed?

___ Has a critical path schedule been developed? Does it consider the following?

- ___ Security restraints?
- ___ Regulatory requirements and permits?
- ___ Effects of legislation (e.g., Clean Air Act, Clean Water Act, Endangered Species Act, National Historic Preservation Act?

Have the following factors been considered in developing project schedules (typically applicable to projects at the pre-construction stage):

- ___ Mandated schedule and milestones?
- ___ Budget-cycle timing?
- ___ Headquarters reviews and approvals?
- ___ Historical site characterization?
- ___ Phased approach?
- ___ Logical sequence of design, procurement, and construction?
- ___ Procurement lead time for equipment/contractors?
- ___ Reasonable manpower levels, buildup, and ramp-down?
- ___ Facility limitations?
- ___ Shift work or overtime work requirements?

Schedules

___ Safety requirements?

___ Exposure constraints?

___ Future regulations and policies?

___ Availability of nonfinancial resources?

___ Uncertainty of demand?

___ Climate?

___ Bonding and liability issues?

___ Patent and intellectual property issues?

___ Availability of funding?

___ Others?

___ Are schedules updated or revised as external factors change?

___ Have the possible effects of schedule delays been taken into consideration on interdependent projects?

Change Control

___ Has responsibility been assigned for ensuring that a feedback system is in place and is used to inform cost estimators of any changes?

___ Is there a comprehensive feedback system in place? Is it

- ___ Formal?
- ___ Informal?

___ Is it being used?

___ Are final project costs collected and compared with original estimates?

___ Are cost data from ongoing and completed projects collected and maintained as a resource for improving cost estimation?

Contracting

___ Do procedures require the participation of cost estimators in the selection of the contract vehicle?

___ Are the procedures followed?

___ Do procedures require the participation of cost estimators in the development/selection of standard and special contract clauses?

___ Are the procedures followed?

___ Is there a feedback procedure to ensure that cost estimators review and ascertain the cost impact of all clauses used in the contract?

___ Is it used?

___ Are estimates prepared (or reviewed) by cost estimators before bid opening and contract negotiation?

Contracting

Do cost estimators have responsibility for preparation, review, and/or approval for the following? If not, who does?

___ Contract vehicle selection?

___ Specification preparation?

___ Contract clause development/selection?

___ Schedule?

___ Bid evaluation?

___ Negotiations?

___ Award?

Contract Changes

___ Do procedures stipulate that all contract modifications, including the negotiation of cost and schedule, require the participation of the cost estimator?

___ Are the procedures practiced?

___ Do procedures require an estimate to be prepared before opening a proposal for contract modifications?

___ Are the procedures practiced?

Scope Revision

___ Is a system in place to ensure timely distribution of the latest version of design criteria, design documents, and contract documents to the cost and schedule estimators?

___ Is it used?

___ Is there a process in place that involves the cost and schedule estimators in project cost and schedule updates?

___ Is it used?

___ Are cost and schedule estimates routinely updated?

Cost Estimate Safeguard

___ Is there a process in place to ensure that estimates are safeguarded after completion?

Is the process followed for

___ Estimates?

___ Budget estimates?

___ Is there a list of personnel authorized to have prior knowledge of access to the formal estimate?

___ Is the access list current and filed with the estimate?

___ Is there a secure system (e.g., locking cabinets, safes, password-protected computer files) to safeguard the integrity of the estimates and supporting documentation and information?

___ Is it used and controlled?

Work Breakdown Structure

___ Is there a WBS activity dictionary?

___ If so, does it provide detailed descriptions for each element?

___ Is there a schedule associated with each element?

___ Does the estimate breakdown follow the WBS activity?

___ Is the estimate developed at the appropriate WBS level?

___ Do all of the estimates associated with the scope of work reference their own WBS activity dictionary or COA dictionary?

___ Is there a consistent application of the WBS?

___ Is a database structured around the WBS to track costs and provide estimation data?

Risk

___ Do procedures require a cost and schedule risk analysis to be performed on every program/project/task?

___ How well do you need to understand the risk analysis to apply cost estimates?

___ Is a cost and schedule risk analysis performed on each program/project/task?

___ Is there dialogue between the individuals performing the cost and schedule risk analyses/contingency estimates and other appropriate personnel (e.g., management, budgeting, technical)?

___ Are quantitative methods used to conduct risk analyses? Identify the methods.

___ Are they automated?

___ Are the contingency estimates a direct result of the risk analysis process?

___ Is there a clear understanding of responsibility for performing and coordinating cost and schedule risk analyses?

___ Are cost and schedule risk levels and contingency estimates clearly documented and appropriately entered into the cost estimate?

___ Is there a separate risk identification and tracking system in place?

___ Is it used?

___ Is there a formal procedure for doing cost and schedule risk analysis calculations?

___ Does this procedure also generate contingency-fund estimating requirements?

___ Are feasibility study cost estimates identified but not performed? What can be done to prevent this oversight?

General

___ Did the staff responsible for preparing the estimate demonstrate a thorough understanding of the project work and its schedule?

___ Was the cost-estimating function allocated sufficient time and resources for each estimate?

___ Has the project/task purpose been defined?

___ Does the project/task purpose reflect an adequate level of detail?

___ Is there documentation (e.g., thorough reviews) of a clear understanding of project requirements/specifications?

___ Have the roles of DOE, other contractors, and subcontractors been defined?

___ Are site-specific conditions/requirements identified?

___ Are all job-related documents referenced and available for review?

___ Is there a planning checklist to ensure that planning is handled systematically?

___ Has a detailed project schedule been established?

___ Is the detailed project schedule available for review?

___ Is there documentation available to ensure that all requirements, schedules, and conditions are current?

___ Are there references to other functional elements?

___ Have all related functional elements been identified?

___ Has coordination with these elements been achieved?

___ Have ground rules and assumptions been defined?

Cost Estimate Evaluation

___ Are Life Cycle Cost Analysis (LCCAs) required?

___ Is a process in place to ensure that LCCAs are performed on a timely basis for project planning?

___ Do the procedures ensure involvement of cost estimators in the LCCA process?

___ Are the procedures followed?

___ Does the process produce LCCAs that are comprehensive and that address project alternatives?

___ Are LCCAs reviewed and approved?

Value Engineering

___ Is there an implementing order in the DOE Operations Office requiring value engineering studies in accordance with DOE Order 4010.1, Executive Order 12615, FAR 48.102C, and FAR 52.248.1?

___ Is the implementing order followed?

___ Are value engineering studies a formal requirement for the project design/approval process?

___ Does the value engineering process require full participation of cost estimators?

___ Are cost estimators participating members of the study team?

Requirements for Cost Estimate

Are there directives concerning authority and responsibility for formal approval of cost estimates at

___ DOE offices?

___ Other contractor offices?

___ Have formal criteria been developed to determine the points in the project development sequence (MSA and MPs) that require formal DOE and contractor management review and approval of cost and schedule estimates?

___ Are directives available, effectively distributed and current?

___ Are they used?

___ Are personnel aware of how the directives affect their participation in the review and approval process?

___ Do personnel follow the appropriate directives?

___ Have requirements for the contents of a cost- and schedule-review package been defined?

Procedures

___ Are there procedures to involve cost and schedule estimators in the development of DOE positions on agreements (e.g., compliance and interagency)?

___ Is there a procedure to ensure that cost and schedule estimators receive feedback on results and subsequent amendments?

___ Are these procedures used?

___ Are these procedures effective?

___ Do these procedures involve the management and operating/national laboratory estimators in cost and schedule negotiations with their subcontractors? Are these procedures used and effective? Is independence maintained?

___ Cost estimating is an art rather than an exact science. How does this affect in its success or failure?

Miscellaneous

___ Is the review process documented with well-defined levels of responsibility and (signature) authority?

___ Are responsibilities properly assigned?

___ Are ICEs prepared, reviewed, and approved at appropriate times?

___ Does the practice of review, approval, and forwarding of cost estimates follow the process documented?

Cost Estimate Documentation

___ Is the supporting documentation complete and reasonable?

___ Are analyses fully documented?

___ Are cost-element considerations reasonable and documented?

Is the estimate

___ Clear?

___ Accurate?

___ Does the estimate identify and properly include subcontracting costs?

___ Are indirects identifiable?

___ Are indirects applied in accordance with site accounting methods?

___ Do indirect cost application and estimator knowledge ensure that there is no duplication or apparent “double-dipping”? [Note: Provide copies of estimate summary sheet(s) showing indirect markups to the Indirects subteam for review.]

___ For the estimates reviewed, was a cost estimate performed to evaluate the reasonableness of prime and subcontractor proposals?

___ Is a log of coordination efforts and contacts maintained?

___ Have historical cost and schedule data been collected, maintained, and used in preparing these estimates?

___ Have historical costs and data been properly adjusted?

___ Were previous estimates available and used?

___ If used, were they reconciled?

___ Were proper inflation factors applied (constant-year dollars to midpoint of each work element, such as assessment, design, construction, cleanup, operations, and maintenance)?

___ Are present-value estimates required?

Quality Control

___ Is a formal quality control process in place for reviewing cost and schedule estimates?

___ Is a defined process in place for resolving problems encountered during review and for maintaining the quality of the cost and schedule estimates?

___ Is concurrence of the cost or schedule estimator required when the cost or schedule estimate is changed?

___ Are reviewers prohibited from changing the cost estimate? (The cost estimate should be sent back to the cost estimator for reestimating.)

___ Are all review comments, including design, returned to the cost estimator for cost impact?

___ Are estimating assumptions documented and included in the quality control review package?

___ Is an independent schedule review made?

___ Is a procedure in place to compare estimates to historical data from analogous projects?

___ Is a procedure in place to address estimates rejected because of poor quality? How is the modified estimate processed?

___ Is there a procedure in place, such as peer review, to ensure that all estimates are logical to other estimators and their supervisors?

___ If an estimate is only partially done, how is this fact conveyed to others?

Contingency

___ Does the estimate include a contingency allowance?

___ Is contingency separately identified and included?

___ Is the contingency allowance adequately described in the estimate narrative?

Project Schedule Development

___ Does the project schedule reflect a clear and complete understanding of the scope of work?

___ Does the schedule reflect an accurate knowledge of resource availability and construction methods?

___ Is the project schedule commensurate with the cost estimate and resource allocations?

___ Is the project schedule updated and maintained as the project is further developed?

___ Is a log maintained to record updates and revisions?

___ Are scheduling tools available?

___ Are they used?

___ Is there an allowance for schedule slips?

___ Are there milestone description sheets?

Appendix H: Additional Lessons-Learned Questions

Practical Cost Estimating and Validation
Lessons Learned Workshop
Estimating Reference Information

Estimating Reference Information

The following references and information are provided to assist the professional estimator.

Estimating Standards and Governing Criteria

The following publications form the standards for professional estimating and/or are the guidance criteria for developing professional cost estimates.

Cost Estimating Guide, Vol. 6, "Cost Guide," Rev. 0, Office of Infrastructure Acquisition (FM-50), U.S. Department of Energy, November 1994.

Departmental Price Change Index (current issue) (the anticipated economic escalation rates issued for Department of Energy construction projects).

Environmental Restoration and Waste Management Cost and Schedule Estimating Guide, Rev. 0, Office of Waste Management, U.S. Department of Energy, September 1993.

Standard Estimating Practices (two volumes), 4th Edition, American Society of Professional Estimators [11141 Georgia Ave., Suite 412, Wheaton, MD 20902, ph. (301) 929-8848] (accepted industry-wide cost estimating standards and practices).

Cost Estimating Publications

The following publications are available to support professional cost estimate development.

Construction Contracting, 4th Edition, by Richard H. Clough, a Wiley-Interscience Publication, John Wiley & Sons, 1981.

Crane Handbook, 1st Edition, compiled by D. E. Dickie and P. Eng., a Publication of the Construction Safety Association of Ontario, October 1975 (74 Victoria Street, Toronto, Canada M5C2A5).

Ductwork Estimating for HVAC, by John Gladstone, McGraw-Hill Book Company, 1992 (1221 Avenue of the Americas, New York, NY 10020) and Engineers Press (Box 141651, Coral Gables, FL 33114).

Engineering News-Record, The McGraw-Hill Companies [1221 Avenue of the Americas, New York, NY 10020, ph. (212) 512-2000] (a weekly magazine posting current major commodity prices).

Environmental Restoration, Assemblies Cost Book*,* ECHOS—Environmental Cost Handling Options and Solutions, R. S. Means Company, Inc., Construction Publishers & Consultants, 1996 [100 Construction Plaza, Box 800, Kingston, MA 02364-0800, ph. (617) 585-7880].

Environmental Restoration, Unit Cost Book, ECHOS—Environmental Cost Handling Options and Solutions, R. S. Means Company, Inc., Construction Publishers & Consultants [100 Construction Plaza, Box 800, Kingston, MA 02364-0800, ph. (617) 585-7880].

Estimating for the General Contractor, by Paul J. Cook, R. S. Means, Inc., Construction Publishers & Consultants, 1982 [100 Construction Plaza, Box 800, Kingston, MA 02364-0800, ph. (617) 747-1270].

Estimator's Electrical Man-Hour Manual, by John S. Page, Gulf Publishing Company, Houston, Texas, 1979.

Estimator's Equipment Installation Man-Hour Manual, by John S. Page, Gulf Publishing Company, Houston, Texas, 1978.

Estimator's Piping Man-Hour Manual, by John S. Page and Jim G. Nation, Gulf Publishing Company, 1976 (Book Division, Box 2608, Houston, TX 77252-2608).

Guidelines For Producing Commercial Nuclear Power Plant Decommissioning Cost Estimates, as sponsored by the National Environmental Studies Project of the Atomic Industrial Forum, Inc.

Heating, Ventilating & Air-Conditioning Systems Estimating Manual, by A. M. Khashab, P.E., McGraw-Hill Book Company, 1977.

Labor Estimating Manual, 1st Edition, Mechanical Contractors Association of America, Inc., February 1971 (revised annually through 1993) (1385 Piccard Drive, Rockville, MD 20850).

Life Cycle Costing for Design Professionals, by Stephen J. Kirk, AIA, CVS, and Alphonse J. Dell'Isola, P.E., CVS, McGraw-Hill, 1995 (11 West 9th Street, New York, NY 10011).

Manual of Steel Construction, 8th Edition, American Institute of Steel Construction, Inc., 1980 (400 North Michigan Avenue, Chicago, IL 60611).

Means Building Construction Cost Data, R. S. Means Company, Inc., Construction Publishers & Consultants, 1996 [100 Construction Plaza, Box 800, Kingston, MA 02364-0800, ph. (617) 585-7880].

Means Electrical Cost Data, R. S. Means Company, Inc., Construction Publishers & Consultants, 1996 [100 Construction Plaza, Box 800, Kingston, MA 02364-0800, ph. (617) 585-7880].

Means Maintenance & Report Cost Data, R. S. Means Company, Inc., Construction Publishers & Consultants, 1996 [100 Construction Plaza, Box 800, Kingston, MA 02364-0800, ph. (617) 585-7880].

Means Mechanical Cost Data, R. S. Means Company, Inc., Construction Publishers & Consultants, 1996 [100 Construction Plaza, Box 800, Kingston, MA 02364-0800, ph. (617) 585-7880].

Means Square Foot Costs, R. S. Means Company, Inc., Construction Publishers & Consultants, 1996 [100 Construction Plaza, Box 800, Kingston, MA 02364-0800, ph. (617) 585-7880].

Mobile Crane Manual, compiled and expanded by Donald E. Dickie and P. Eng., from an original concept and work by D. H. Campbell and P. Eng., Construction Safety Association of Ontario (74 Victoria St., Toronto, Canada M5C2A5).

OSHA Excavation Standard Handbook, J. J. Keller & Associates, Inc., 1993 [3003 W. Breezewood Lane, Box 368, Neenah, WI 54957-036, ph. (414) 722-2848].

Process Plant Construction Estimating Standards (four volumes), Richardson Engineering Services, Inc., 1996 [1742 S. Fraser Drive, P.O. Box 9103, Mesa, AZ 85214-9103, ph. (602) 497-2062, fax (602) 497-5529].

Rigging Manual, 1st Edition, compiled by D. E. Dickie and P. Eng., Construction Safety Association of Ontario, October 1975 (74 Victoria Street, Toronto, Canada M5C2A5).

Walker's Quantity Surveying and Basis Construction Estimating, Frank R. Walker Company, 1981 [5030

N. Harlem Ave., Chicago, IL 60656, ph. (312) 867-7070].

Subject Matter Experts

First Name	Last Name	Office	Telephone #	Fax #	E-mail Address
Andy	McCown	LANL	505-667-6576	505-665-5125	awm@lanl.gov
Charles	Atterbery	Mitretek Systems	210-479-0470 ext. 311	210-479-0482	attebery@mail50.mitretek.org
Terry	Brennan	DOE/SRS	803-725-4716	803-725-3616	terryj.brennan@srs.gov
Juan	Castro	DOE/FM-20	202-586-9706	202-586-4500	
Kin	Chao	DOE/EM-423	301-903-2605	301-903-2747	kin.chao@em.doe.gov
Armando	Chavez	DOE-AL	505-845-6945	505-845-5439	achavez@doeal.gov
Ron	Clendenon	DOE/Richland	509-373-9623	509-373-0726	ronald_l_clendenon@rl.gov
Richard	Couture	DOE/OAK	510-637-1635	510-637-2001	richard.couture@oak.doe.gov
Celinda	Crawford	DOE/EM-30	301-903-5723	301-903-	celinda.crawford@doe.em.gov
Hindle	Damon	BSRI	803-952-6384		damon.hindle@srs.gov
Dave	Drucker	DOE/EM-424	301-903-7612	301-903-2747	dave.drucker@em.doe.gov
Rich	Fallejo	DOE/OAK	510-637-1639	510-637-2001	richard.fallejo@oak.doe.gov
Robert	Frizzell	DOE/Fernald	513-648-3114	513-648-3077	Bob.Frizzell@em.doe.gov
Judy	Fulner	DOE/FETC	304-285-4520	304-285-4292	JFULNE@fetc.doe.gov
Pete	Greenwalt	DOE/Ohio	513-865-3862	513-865-	
Anand	Gupta	DOE/EM-43	301-903-8480	301-903-3617	anand.gupta@em.doe.gov
Ross	Hallman	DOE/ORO	423-241-6596	423-576-3799	HALLMANTR@oro.doe.gov
Carol	Hathaway	DOE/Idaho	208-526-4049	208-526-0598	hathawca@inel.gov
Rozanne	Huntley	INEL-Litco	208-526-0696	208-526-0202	rsh@inel.gov
Gerald	Kassalow	DOE/EM-431	301-903-8122	301-903-3479	gerald.kassalow@em.doe.gov
Sue	Jones	HAZWRAP	423-241-9785	423-241-9400	jonessr1@ornl.gov
Dennis	Long	DOE/Ohio	937-865-4521	937-865-4063	dennis.long@em.gov
Jim	Lucas	DOE/ID	208-526-6479	208-526-0598	lgj@inel.gov
Dolores	Madrid	DOE-AL	505-845-4576	505-845-4239	dmadrid@doeal.gov
Wendell	Mansel	DOE/ORO	423-241-3662	423-576-6074	manselwb@oro.doe.gov
Mary	McCune	DOE/EM-43	301-903-8152	301-903-2461	mary.mccune@em.doe.gov
Phillip	Neuscheler	DOE/EM-15	202-586-7505	202-586-9440	phil.neuscheler@em.doe.gov
Marti	Newdorf	DOE/FM	202-586-9708	202-586-4500	martin.newdort@hq.doe.gov
Guru	Patil	BAH/HQ	301-916-7332	301-916-7333	patilg@bah.com
Dee	Perkins	DOE/Portsmouth	614-897-5949	614-897-2982	
Katherine	Peterson	Army Corps of Enginner	402-697-2610	402-697-2639	atharine.m.peterson@mrd01.usace.army.mil
Autar	Rampertaap	DOE/EM-453	301-903-8191	301-903-3877	autar.rampertaap.em.doe.gov
Bob	Ratzer	DOE/AL	505-845-4115	505-845-4239	eratzer@doeal.gov
Myrna	Redfield	DOE/Paducah	502-441-6815	502-441-6801	radfieldme@ornl.gov
Joe	Saliunas	BAH	301-916-7206	301-903-7272	Saliunasj@bah.com
Barbara	Schuelke	DOE/RF	303-966-9762	303-966-4728 or 4775	barbara.schuelke@rfets.gov
Patricia	Shirley	DOE/Ohio	513-865-4298	513-865-4063	pat.shirley@em.doe.gov
Robert	Silverman	LMI	703-917-7182	703-917-7477	rsilverman@lmi.org
Bryan	Skokan	DOE/EM-423	301-903-7612	301-903-2477	bryan.skokan@em.doe.gov
Anne	Sun	DOE/OAK	510-637-1500	510-637-2001	antonia.sun@oak.doe.gov
John	Sweeney	DOE/ORO	423-576-5904	423-576-6074	sweeneyjt@oro.doe.gov
Arturo	Tamayo	DOE/Los Alamos	505-667-2038	505-665-4504	atamayo@doe.lanl.gov
Karen	Tenke-White	DOE/Chicago	708-252-9659	708-252-8649	karen.tenke-white@ch.doe.gov
K.C.	Thompson	DOE/NV	702-295-0187	702-295-1113	thompsonkc@nv.doe.gov
Denise	Tousignaut	BAH/HQ	301-916-7396	301-916-7333	tousignautd@bah.com
Steve	Tower	DOE/RF	303-966-2133	303-966-4728	steve.tower@rfets.gov
Doris	Valentine-Meye	U.S. COE	202-761-0233	202-761-0999	doris.valentin-meyer@inet.hq.usace.army.mil
Jerry	Van Fossen	DOE/Weldon Spring	314-441-8978	314-447-0803	jerry_vanfossen@mk.com
Phil	Van Loan	DOE/Ohio	513-865-5147	513-865-4063	phil.vanloan@em.doe.gov
Greg	Wilkett	LGT/Portsmouth	614-289-2331	614-897-3800	nwg@ornl.gov
Stan	Wolf	DOE/EM-50	301-903-7962	301-903-	stan.wolf@em.doe.gov
Dave	Yockman	DOE/Fernald	301-903-7632	301-903-2461	dave.yokman@em.doe.gov

Miscellaneous Sources

Decommissioning Handbook, DOE/EV/10128-1, RLO/SFM-80-3, NESI for the U.S. Department of Energy, November 1980.

Blueprint Reading, by Kenneth L. Gebert, American Technical Publishers, Inc., 1986.

Business Forms Collection, by Bantam Books, 1982.

Geometry & Trigonometry for Calculus, by Peter H. Selby, John Wiley & Sons, Inc., 1975, ***Process Plant Construction Estimating Standards,*** Vol. 1, "Sitework-Piling-Concrete," Richardson Engineering Services, Inc., 1996.

Standards & Services Catalogue, Summer 1996, Engineering Documents & Regulations, Custom Standards Serv., Inc., 1996 (source for American Society for Testing and Materials).

Vulcraft Steel Joints & Joist Girders, a Division of Nucor Corporation.

Vulcraft Steel Roof & Floor Deck, a Division of Nucor Corporation.

Professional Associations

Several professional organizations have been organized to recognize competent achievers in the development of portions or all of the cost estimate. Several of these organizations offer professional certification programs. Following are some organizations that are currently active:

American Society of Professional Estimators
11141 Georgia Ave., Suite 412
Wheaton, MD 20902
ph. (301) 929-8848

Society of Cost Estimating & Analysis
101 South Whiting Street, Suite 201
Alexandria, VA 22304
ph. (703) 751-8069
fax (703) 461-7328

Society of American Value Engineers
60 Revere Drive, Suite 500
Northbrook, IL 60062
ph. (708) 480-1730

The Association for the Advancement of Cost Engineering, International
209 Prairie Ave., Suite 100
Morgantown, WV 26505
ph. (800) 858-COST